SMART COMBINED SEWER MONITORING SYSTEM

[1]Adhithya K S, Ajithganesh Vijay, [2]Anu Joseph, [3]Christy Maria Tom, [4]Juney M George

Electronics and Communication Engineering
St. Joseph's College of Engineering and Technology
Palai, India

Abstract: This paper aims at providing smart solutions to the blockages, and presence of any poisonous sewage gases and works on a system of live sewage level detection and monitoring. There is currently an ongoing digital transformation for sewage and wastewater management. By automating data collection and enabling remote monitoring, we will not only be able to save abundant human resources but also enable predictive maintenance which is based on big data analytics. This paper presents a smart sewage water management system that is currently under development in developing countries. Real-time data can be collected from many sensors which have already been deployed Whenever, a certain threshold is crossed, an alert is sent to the observer who is examining the conditions from a remote location. The information is then forwarded indicating whether it is safe for the worker to clean or work in that environment or not. Information is shared using MQTT.

Index Terms—MQTT, Arduino Nano, Nodemcu

I. INTRODUCTION

The sewage system plays a very important role in big cities where millions of people live. The sewage system is known as the base for land dryness from the excess and unused water, Rainwater, and wastewater. Sewage is the system by which water or other waste liquids are drained from a place. The irregular monitoring had contributed to the blocking of the sewer line, which trigger flooding in the neighbourhood. Manual monitoring is also incompetent. We are only able to record limited reports with low accuracy. Problems such as blockage due to waste material, a sudden increase in the water level as well as various harmful gases can be produced if the proper cleaning actions are not taken from time to time. Today's sewage system is not computerized due to which it is hard to know if the blockage is occurring in a particular location. Metropolitan cities have adopted underground sewage systems. If the sewage maintenance is not proper, groundwater gets contaminated causing infectious diseases. Blockages in drains during monsoon season cause problems in the routine of the public. Hence, it will be better to have a facility, which alerts the officials about blockages in sewers and their exact location so that they can be easily identified and cleared. Manhole which is meant to carry out inspection, clean, and remove obstruction in the sewer line is also becoming the reason for accidents, taking lives and affecting them. Most of the systems in developing countries are not automated. If the drainage maintenance is not thorough, the pure water gets contaminated with drainage water and infectious diseases may get spread. However, the manhole cleaning process is a big issue. The manhole gas mixture found in the sewerage pipes is mainly containing toxic gases like CO, H2S, CH4, NH3, Nitrogen oxide, etc. Exposure to these gases may cause threats to human lives. This paper represents the implementation and design function of a Smart Combined Sewer and Manhole Monitoring System which will help the officials of Municipal Corporation by informing them immediately after garbage overflow and the exact location where the sewerage needs to be cleaned up. The main focus of this paper is to provide a system that monitors blockages in the sewer line, water level, atmospheric temperature, water flow rate, and the presence of toxic gases.[2]

II. LITERATURE REVIEW

In the present scenario, there is no efficient method to detect the presence of toxic gases inside the sewage and also to detect the blockages in the sewer line. This leads to several problems such as causing floods in the urban areas and also being fatal to the manhole workers. In this paper, we introduce a method that detects the presence of harmful gases and blockage in real-time. Sewage system monitoring plays an important role to keep the city clean. Our paper implements a smart and real-time combined sewage Monitoring System with the help of the Internet of Things. At present, there is no well-implemented technology for the continuous monitoring of the combined sewage system. Although there are several manual methods for gas and blockage detection, they are incompetent. This manual method includes placing a lit candle into the manhole for oxygen detection, such that the absence of oxygen is indicated if the candle dims and goes out. This method may be fatal, as the flame in the presence of methane or other flammable gases could lead to adverse results. The water level is determined if the manhole is overflown. This may be too late to take any precautions. Thus, the absence of an effective water level indicator is also worth attention. The blockage is also determined manually. This extensive dependence on manual help may lead to hazardous effects on scavengers who works in unpredictable conditions.[3]

III. METHODOLOGY

Smart Combined sewage Monitoring System is an automated system designed to monitor the sewage in real-time. The proposed plan consists of taking data from the sewage via various sensors and processing the collected data and sending it to the server and the system sends alerts to the concerned authorities.

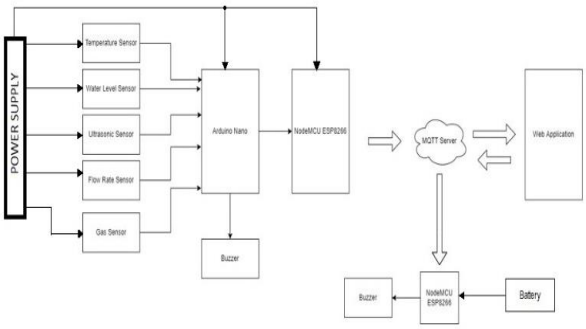

The functional block diagram describes the monitoring of manholes in the underground sewage system. Any blockages, rise in temperature, presence of toxic gases, and overflow are detected by the sensors. The signals from the sensors are fed to the controller, which is programmed to generate alerts.

The signals from the sensors are fed to the controller, which is programmed to generate alerts. The sensors will identify the clogging inside the drainage system and will give information about the location and further actions will be taken care of by the authority. Arduino Nano is the host controller which collects all sensor data. A temperature sensor is used for measuring the temperature of drainage. Water level sensor for monitoring the water level of the drainage. The ultrasonic sensor detects blockage in the drainage. Flow rate is used for measuring the water flow rate in the drainage. A gas sensor is used for measuring the air quality in the drainage. The collected data on the Arduino Nano will send to the NodeMCU ESP8266. NodeMCU ESP8266 will act as a gateway controller, which sends the collected data to the MQTT server. A web application is used to monitor the drainage. The data is received by the web application from the MQTT server. And the wearable safety device is attached to the person who enters the drainage. Authority can send an alert through the wearable safety device when there is a sudden change in the environment of the sewage system.

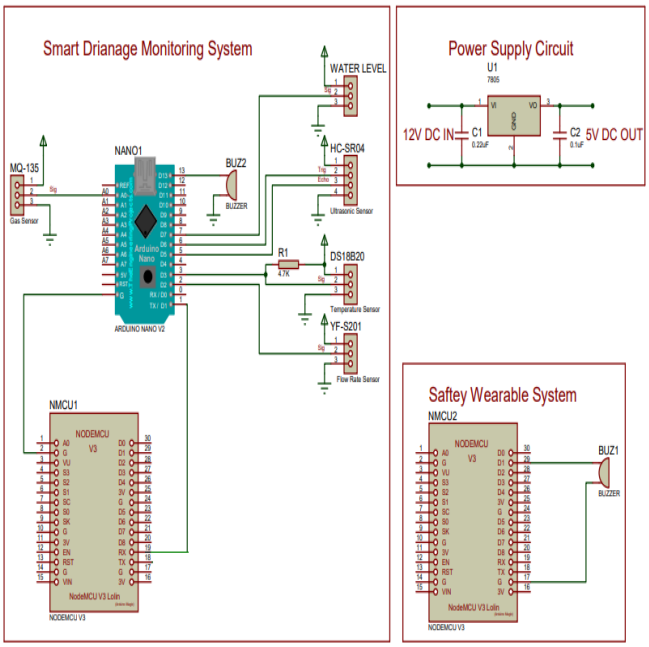

Arduino's 2nd pin is connected to the signal pin of the flow rate sensor. Arduino's 3rd pin is connected to the signal pin of the temperature sensor. Arduino 5th and 6th pins are connected to Echo and trigger pins of Ultrasonic sensor respectively. Arduino's 7th pin is connected to the signal pin of the water level sensor. Arduino A0 pin is connected to the signal pin of the gas sensor. The Tx pin of Arduino is connected to the Rx pin of the NodeMCU ESP8266. Arduino's 13th pin is connected to a buzzer

Power Supply Circuit:-The power supply circuit is only a regulator section that consists of a 7805 regulator IC with filter capacitors. The 12V DC power is given as input and 5V DC is taken as output to power sensors and modules.

Wearable Safety Device:-NodeMCU ESP8266 D1 pin is connected to the buzzer and is powered using a battery

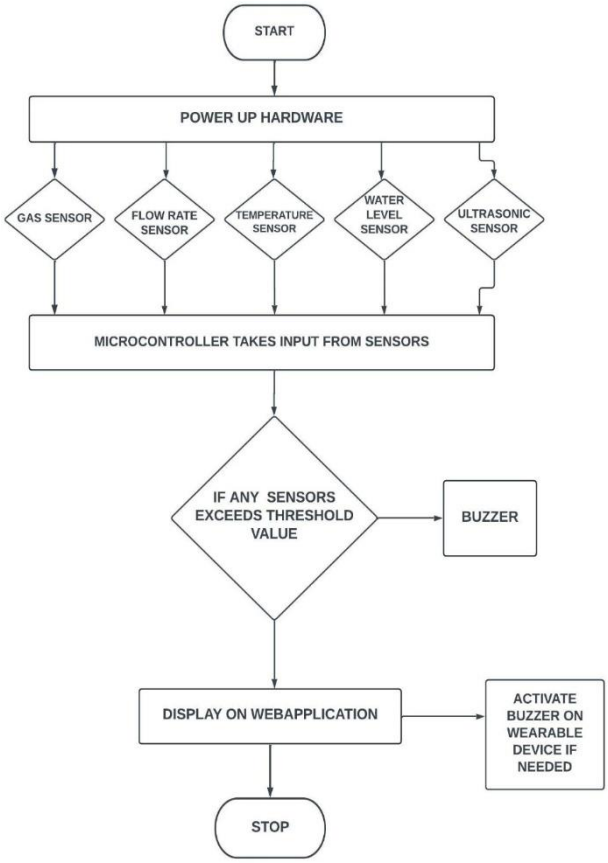

IV. ALGORITHM

Step 1 Power Up hardware
Step 2 Initialize hardware module
Step 3 Arduino sense Sensor values
Step 4 Temperature sensor sense environment temperature
Step 5 Gas sensor checks the air quality in the environment
Step 6 Water level sense the water level of the drainage
Step 7 Flow rate sensor measures the quantity of the amount of water flowing through the drainage
Step 8 Ultrasonic sensor senses the obstacle in the drainage
Step 9 All sensor values send to the web application
Step 10 If any sensor exceeds the threshold value the buzzer will be on and an alert will be shown on the web application
Step 11 If any alert signal is sent using a web application, it will activate a buzzer on the wearable device.
Step 12 STOP

V. CONCLUSION

Monitoring the sewage system is critical for keeping the city clean. In truth, sewage monitoring teams are not present in all locations. It leads to inconsistent sewer line condition monitoring. With the support of the Internet of Things, this paper demonstrates the application and design function of a smart combined sewer Monitoring System. The sensor unit automatically senses and updates the live values of the physical parameters like temperature, water level, flow rate and blockages through IoT. This makes the system smart and automated. A smart city is a future goal to have cleaner and better amenities for society. Smart underground infrastructure is an important feature to be considered while implementing a smart city. Because manual monitoring is ineffective, sewage problems are handled slowly and take longer to resolve. To mitigate all these issues, the system using a wireless sensor network, consisting of sensor nodes is designed. The proposed system is low cost, low maintenance, IoT-based real-time which alerts the managing stations when any of the manholes crosses its threshold values. This system also reduces the death risk of manual scavengers who clean the underground sewage and also benefits the public.

REFERENCES

1. 1.Q. Wang, V. Westlund, J. Johansson and M. Lindgren, "Smart Sewage Water Management and Data Forecast," 2021 Swedish Artificial Intelligence Society Workshop (SAIS), 2021, pp. 1-4, doi: 10.1109/SAIS53221.2021.9484017.
2. N. Asthana and R. Bahl, "IoT Device For Sewage Gas Monitoring And Alert System," 2019 1st International Conference on Innovations in Information and Communication Technology (ICIICT), 2019, pp. 1-7, doi: 10.1109/ICIICT1.2019.8741423
3. Dhanalakshmi.G, Akhil.S, Francisca Little Flower.M, Haribalambika.R, “Explosion detection and drainage monitoring system by Automation System” International Journal of Innovative research in computer and communication engineering, vol. 6, issue 2, February 2018
4. C. Xiu and L. Dong, "Design of Sewage Treatment Monitoring System Based on Internet of Things," 2019 Chinese Control And Decision Conference (CCDC), 2019, pp. 960-964, doi: 10.1109/CCDC.2019.8832470.