Enhancement of Overall Heat Transfer Coefficient of Concentric Tube Heat Exchanger Using Al_2O_3/Water Nano-fluids

Ankit Kumar Gupta[1*], Bhupendra Gupta[2], Jyoti Bhalavi[3], Mohan Khandagre[1]

[1]Research Scholar, Jabalpur Engineering College, Jabalpur - 482011, India
[2]Department of Mechanical Engineering, Jabalpur Engineering College, Jabalpur - 482011, India
[3]Department of Industrial & Production, Jabalpur Engineering College, Jabalpur - 482011, India

***Abstract*: In this study overall heat transfer coefficient, heat transfer rate and pressure loss characteristics of concentric tube Heat exchanger handling Al_2O_3/water nanofluids have been analysed by the computation software ANSYS 16.0 version. The computational analysis was carried out under laminar and turbulent flow condition in the Reynolds number range 2000-10000. The finite element analysis software ANSYS workbench 16.0 was used to perform CFD analysis of under standard working condition. The Al_2O_3/water nanofluids at 0.5%, 1.5% and 2.5% volume concentration have been taken for this study. It is studied overall heat transfer coefficient, heat transfer rate and pressure loss increases with increasing volume concentration of Al_2O_3/water nanofluids. 7.2%, 13.58% and 21.38% enhancement in overall heat transfer coefficient were observed at 0.5%, 1.5% and 2.5% volume concentration of nanofluids respectively. 6.11%, 12.45% and 17.27% enhancement in heat transfer rate were observed at 0.5%, 1.5% and 2.5% volume concentration of nanofluids respectively. There was some penalty in pressure loss also observed.**

***Keywords*: Nanoparticles, Al_2O_3/water Nanofluids, Concentric tube Heat exchanger, CFD modelling.**

1. Introduction: Concentric tube heat exchanger are widely used in many applications such as power plant, air-conditioning, petrochemical industry, refrigeration, process industry, solar water heater, chemical reactors, and nuclear reactor etc. hence overall heat transfer coefficient, heat transfer rate enhancement and decrease in pressure loss had been a subject of interest in many research studies in many decades. Increase in heat exchanger performance can lead to more economic design of heat exchanger which can help to make energy material and operational cost saving. The most frequently used coolants in the heat-transfer equipment study are air, water, and fluoro-chemicals however; the heat-transfer capability is limited by the working fluid transport properties. In terms of reducing the size and cost of the heat exchanger devices and saving up the energy, many engineering techniques were devised to enhance the heat transfer rate from the wall in heat exchangers. One of the methods for the heat-transfer enhancement is the application of additives to the working fluids to change the fluid transport properties and flow features. However current progression in thermal sciences and nanotechnology provides a route to this. As for further enhancement of the thermal performance of heat transfer equipment, the concept of use of nanofluids is proposed. Mixture of conventional heat transfer fluids and nanoparticles called nanofluid. Thermal properties including; thermal conductivity, specific heat, density and viscosity of nanofluids change compare to base fluids. Change in these properties of nanofluids lead to better heat transfer characteristics. Thermal properties of nanofluids depend on many factor such temperature, particle size and preparation method etc. so during preparation of nanofluids proper care must be taken.

2. Literature survey: Mohammad Sikindar Baba et al. **[1]** This paper reports an experimental study of forced convective heat transfer in a double tube counter flow heat exchanger with multiple internal longitudinal fins using Fe3O4 /water nanofluid. Results indicates that the heat transfer rate is 80–90% more in finned tube heat exchanger compared to the plain tube heat exchanger for the higher volumetric concentration of nanofluid. The heat transfer rate in the finned tube heat exchanger is 90–98% higher than the heat transfer rate in plain tube heat exchanger for 0.4% Fe3O4-water nanofluid. The friction factor in finned tube is 3.75 times the plain tube friction factor for 0.4% Fe3O4-water nanofluid flowing at the rate of 2 LPM. D Han et al. **[2]** This study aims at experimentally investigating the effect of Al2O3 /water nanofluids on the heat transfer enhancement inside the double tube heat exchanger at variable inlet temperature. Al2O3 nanoparticle with concentration of 0.25% and 0.5% by volume concentration has been used at different inlet temperature. Results from the study shows that the heat transfer increases with the increase in temperature and volume concentration of nano-particles. Significant improvement over the water is seen with maximum Nusselt number increase up to 24.5% at 50℃ inlet temperature. Maximum increase in convective heat transfer coefficient has been calculated of about 9.7% and 19.6% for 0.25% and 0.5% of volume concentration respectively. Maximum increase in convective heat transfer coefficient has been calculated of about 9.7% and 19.6% for 0.25% and 0.5% of volume concentration respectively. K. Palanisamy et al. **[3]** This study investigates the heat transfer and the pressure drop of cone helically coiled tube heat exchanger using (Multi wall carbon nano tube) MWCNT/water nanofluids. The experiments results shown that 28%, 52% and 68% higher Nusselt number than water for the nanofluids volume concentration of 0.1%, 0.3% and 0.5% respectively. It is found that the pressure drop of 0.1%,0.3% and 0.5% nanofluids are found to be 16%, 30% and 42% respectively higher than water. The improved heat transfer coefficient is found to be 14%, 30% and 41% more than the water at 0.1%, 0.3% and 0.5% MWCNT/water nanofluid respectively. P.C. Mukesh Kumar et al. **[4]** In this investigation, the heat transfers and pressure drop of the double helically coiled heat exchanger handling MWCNT/water nanofluids have been analysed by the computational software ANSYS 14.5 version. The simulation data was

compared with the experimental data. It is found that the Nusselt number of 0.6% MWCNT/water nanofluids is 30% higher than water at the Dean number value of 1400 and Pressure drop is 11%higher than water at the Dean number value of 2200. It is studied that the Nusselt number is 20%, 24%, and 30% higher than water at 0.2%, 0.4%, and 0.6% nanofluids respectively at the Dean number of 2000. Also found that the pressure drops are 4%, 6%and 10% for 0.2%, 0.4%, and 0.6% nanofluids respectively are higher than water. This is due to the effect of temperature on nanofluids viscosity. Finally, the CFD data were compared with experimental data and hold good agreement with the deviation of CFD Nusselt number and pressure drop are 7.2% and 8.75% with the experimental data. Mohammad Hussein Bahmani et al. **[5]** In present study, heat transfer and turbulent flow of water/alumina nanofluid in a parallel as well as counter flow double pipe heat exchanger have been investigated. The governing equations have been solved using an in-house FORTRAN code, based on finite volume method. Single-phase and standard k- e models have been used for nanofluid and turbulent modelling, respectively. The results indicated that increasing the nanoparticles volume fraction or Reynolds number causes enhancement of Nusselt number and convection heat transfer coefficient. Maximum rate of average Nusselt number and thermal efficiency enhancement are 32.7% and 30%, respectively. Maximum thermal efficiency and average Nusselt number enhancement observed in counter flow regime which are equal to 30% and 32.7%, respectively.

3. Materials and their properties: There are three mode of heat transfer i.e. conduction, convection and radiation but in case of heat exchanger only conduction and convection is considered. Heat transfer in the tube of concentric tube heat exchanger are by the conduction, so for the construction of tube such material is required which have higher thermal conductivity. In this project tubes are constructed from the copper which properties are mention in table1**.** In this project Water and Al_2O_3/water nanofluids are used as working fluid. Properties used for water and nanoparticle given by Ali H. Abdelrszek et al. **[6]** are shown in *table1***.** Since nanofluids is a mixture of nanoparticle and base fluid (water in this case) so properties of base fluids are changed, to determine the properties of nanofluids show many researchers gives different-different correlation, but till now there are no unified correlation developed due to lack of experimental results. The correlation used for determination of thermos-physical properties of nanofluids are given by Suleman Akilu et al. **[7].**

Table 1: Properties of heat exchanger material, base fluid and nanoparticle.

S.No.	Material	Thermal conductivity(W/mk)	Density(Kg/m^3)	Specific heat (J/KgK)	Viscosity (PaS)
1	Copper	401	8933	385	-
2	Al_2O_3 Nanoparticle	36	3970	765	-
3	Base Fluid (Water)	0.615	996	4178	0.000803

3.1 Thermal conductivity of nanofluids: to determine thermal conductivity of nanofluids there are so many research have been conducted and resulted with different-different correlation on that correlation is given by *Hamilton and Grosser* is used to determine thermal conductivity of Al_2O_3/water nanofluids.

$$K_{nf} = K_{bf}\left[\frac{K_p + (n-1)K_{bf} - (n-1)\varnothing_p(K_{bf} - K_p)}{K_p + (n-1)K_{bf} + \varnothing_p(K_{bf} - K_p)}\right] \quad \text{…… (1)}$$

3.2 Specific heat of nanofluids: specific heat represent how much heat is needed to rise the unit degree change of unit mass of substance. Correlation given by *Xuan and Roetze* is used to determine the specific heat of Al_2O_3/water nanofluids.

$$C_{p,nf} = \frac{(1-\varnothing_p)\rho_{bf}C_{bf} + \varnothing_p\rho_p C_p}{\rho_{nf}} \quad \text{…… (2)}$$

3.3 Viscosity of nanofluids: Viscosity play a very important role in pressure drop characteristics of flowing fluids. In the case nanofluids *K.V. Sharma* model give the accurate value for viscosity.

$$\mu_{nf} = \left[(1+\varphi_p)^{11.3}\left(1+\frac{T_{nf}}{70}\right)^{-0.038}\left(1+\frac{d_p}{170}\right)^{-0.061}\right]\mu_{bf} \quad \text{…… (3)}$$

3.4 Density of nanofluids: Density of nanofluids in simply determine by the mass balance equation resulted the following correlation.

$$\rho_{nf} = (1-\varnothing_p)\rho_{bf} + \varnothing_p\,\rho_p \quad \text{…… (4)}$$

From the base fluid and nanoparticle properties, nanofluids properties determine by the use of equation number (1-4) Shown in *table 2*.

Table 2: Thermo-physical properties of Al_2O_3/water nanofluids.

S.No.	Volume concentration	Thermal conductivity(W/mk)	Density(Kg/m^3)	Specific heat (J/KgK)	Viscosity (PaS)
1	0.5%	0.6239	1011	4112	0.0008205
2	1.5%	0.6417	1040	3984	0.000887
3	2.5%	0.6560	1070	3862	0.0009915

4. CFD analysis: ANSYS 2016.0 Software is used for the computational fluid dynamics analysis of concentric tube heat exchanger, the steps involved in analysis are as follow:

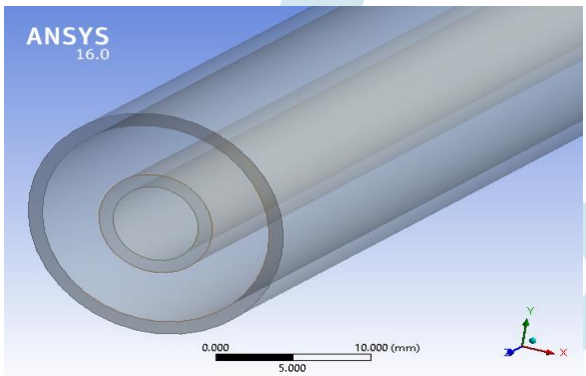

Fig.1: Model of concentric tube heat exchanger used for analysis.

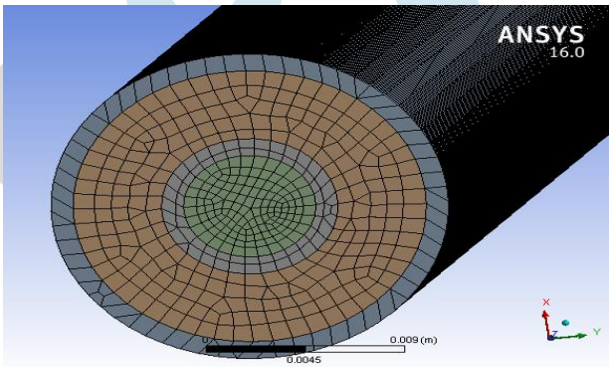

Fig.2: Meshed model of concentric tube heat Exchanger used for analysis.

4.1 Model creation: to create model of concentric tube heat exchanger, *ANSYS 16.0 DESIGN MODULAR* is used. With dimension of inside tube (inner tube diameter is 6mm and outer diameter is 8mm) and outside tube (inner diameter 16mm and outer diameter 18mm). Created model is shown in **Fig.1**.

4.2 Meshing of model: Meshing is basically division of all domain into small-small parts show that all governing equation is solved for each small parts. For a precise result a sufficient number of mesh is required. In this project concentric tube heat exchanger is divided into 719160 number of small element. Meshed model of heat exchanger shown in **Fig.2**.

4.3. *Initial and boundary condition set-up:* To solve the governing equation in fluent appropriate initial and boundary condition must require for the correct result in this project the following conditions are used as shown in *table 3*.

Table 3: Initial and boundary condition used in ANSYS fluent.

S. No.	**Parameter**	**Conditions**
1	Model	Energy equation-on Viscous- Standard K-e, Standard Wall function.
2	Material	Heat exchanger Tubes-Copper Hot fluid- water Cold fluid- Nanofluids
3	Cell Zone Condition	Inner Tube-Hot Fluid (water) Annulus- Cold Fluid (Nanofluids)
4	Boundary condition	Inlet- Velocity inlet with no slip Outlet- Pressure outlet

5. Results and discussion:

5.1 Overall heat transfer coefficient variation: In the design of heat exchanger overall heat transfer coefficient is an important parameter because it includes both conduction and convection parameter of heat exchanger. Overall heat transfer coefficient increases with increase in Reynolds number and concentration of Nanofluids. Variation of overall heat transfer coefficient is shown in **Fig.3.** 7.2%, 13.58% and 21.38% enhancement in overall heat transfer coefficient are observed at 0.5%, 1.5% and 2.5% volume concentration of Al2O3 Nanofluids respectively.

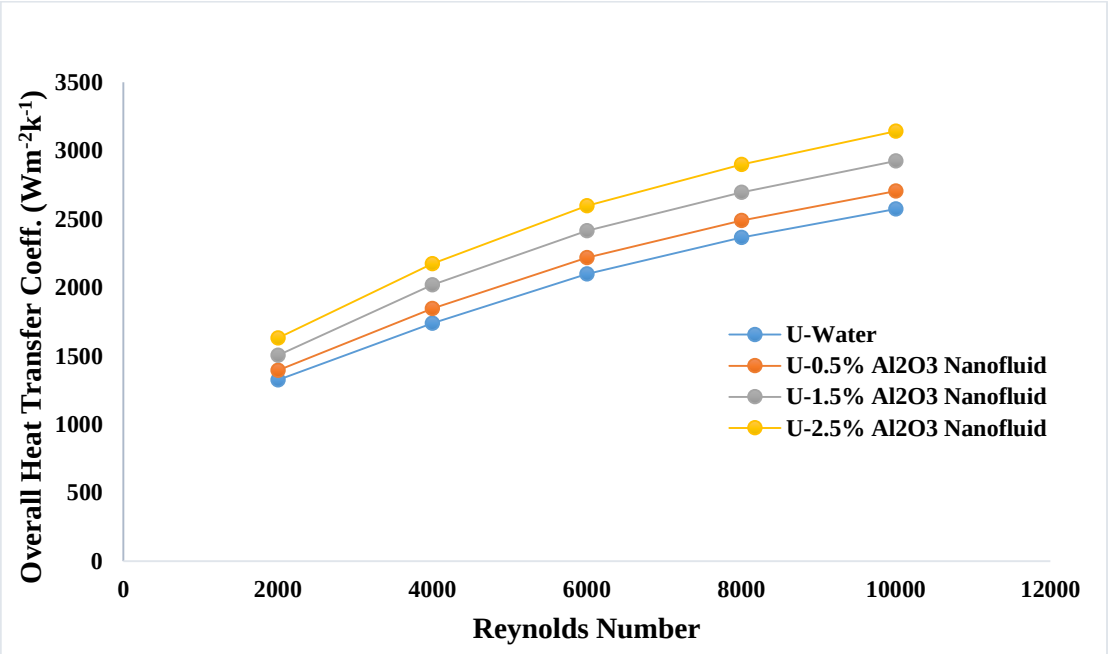

Fig.3: Variation of overall heat transfer coefficient

5.2 Heat transfer rate variation: heat transfer rate is main parameter for which heat exchanger is design size and flowing condition is changed according to heat transfer requirement. **Fig.4** shows the variation of heat transfer rate with Reynolds number and Nanofluids concentration. 6.11%, 12.45% and 17.27% enhancement in heat transfer rate were observed at 0.5%, 1.5% and 2.5% volume concentration of nanofluids respectively.

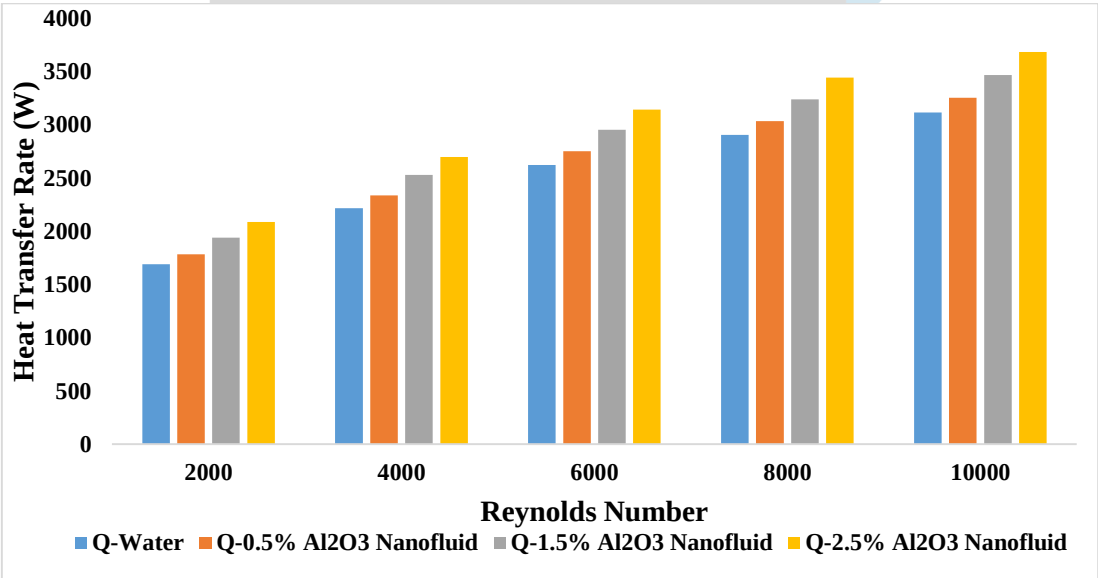

Fig.4: Variation of heat transfer rate.

5.3 *Temperature contour:* Counter flow arrangement with constant 365K inlet Temperature of hot fluid and constant 300K inlet temperature of cold fluids. With the increase in Reynolds number and concentration of nanofluids outlet temperature of hot fluid decreases and outlet temperature of cold fluids increases. **Fig.5** shows the variation of cold fluid temperature at 8000 Reynolds number and 1.5% volume concentration of nanofluids.

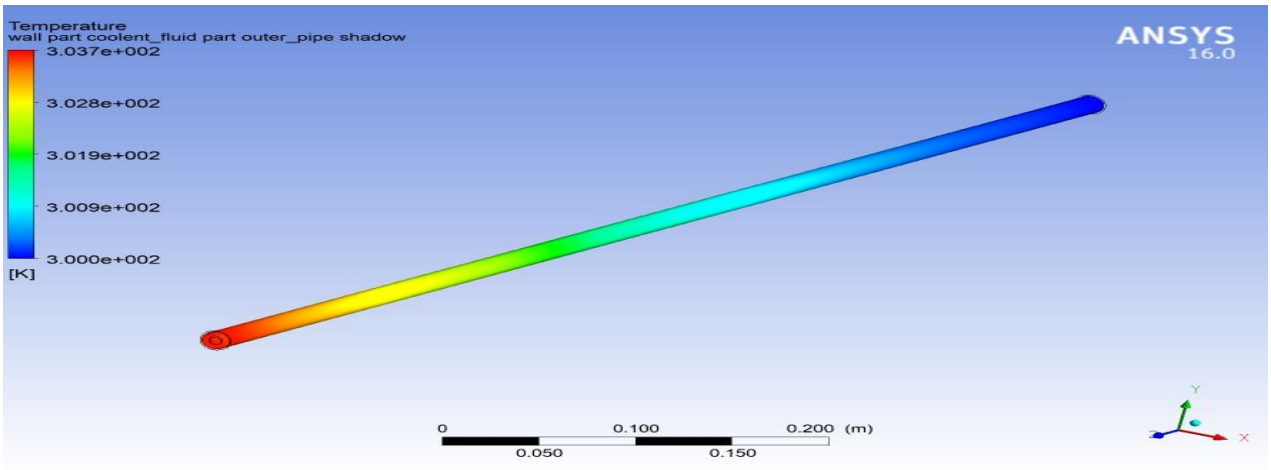

Fig.5: Cold fluid temperature contour at Re number 8000 and 1.5% concentration

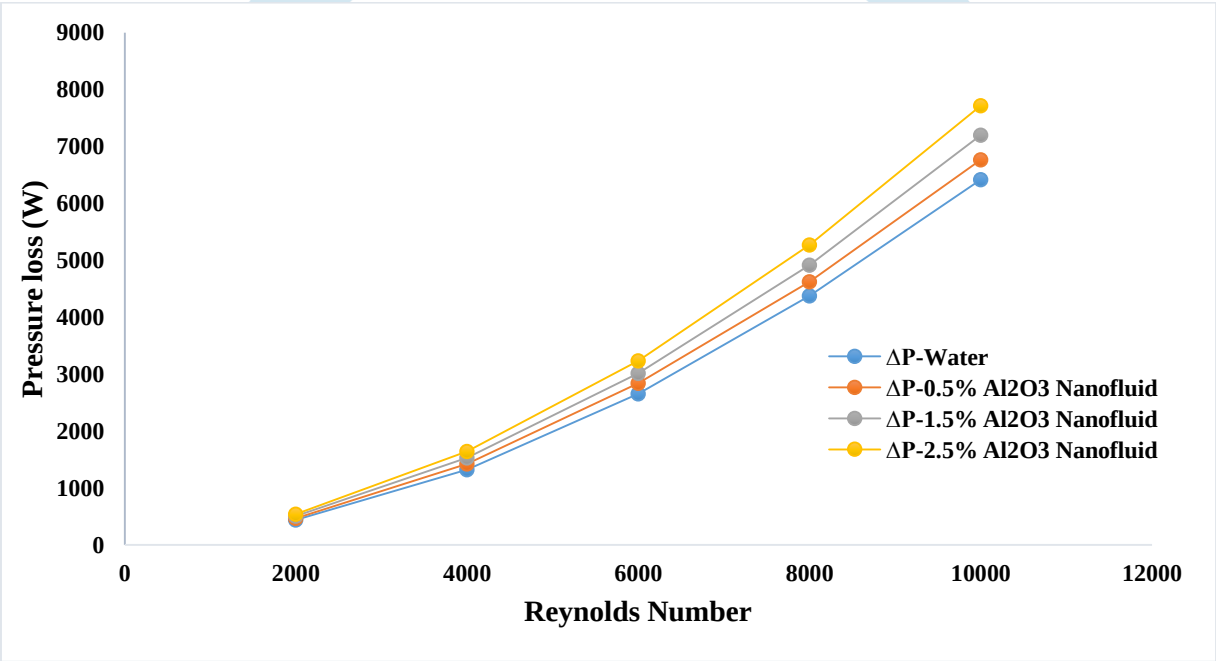

Fig.6: Variation of Pressure loss with Reynolds number and nanofluids concentration.

5.4 Pressure variation: With the increase in Reynolds number and concentration of nanofluids pressure at the inlet of cold fluid increases. **Fig.6** shows the comparison of pressure lose for nanofluids at different Reynolds and at different volume concentration. Results show that 5.11%, 9.13% and14.88% enhancements in pressure lose for 0.5%,1.5% and 2.5% nanofluids respectively over the base fluid (water). **Fig.7** shows the pressure contour of nanofluids at 6000 Reynolds number and 0.5% volume concentration over the length of concentric tube heat exchanger.

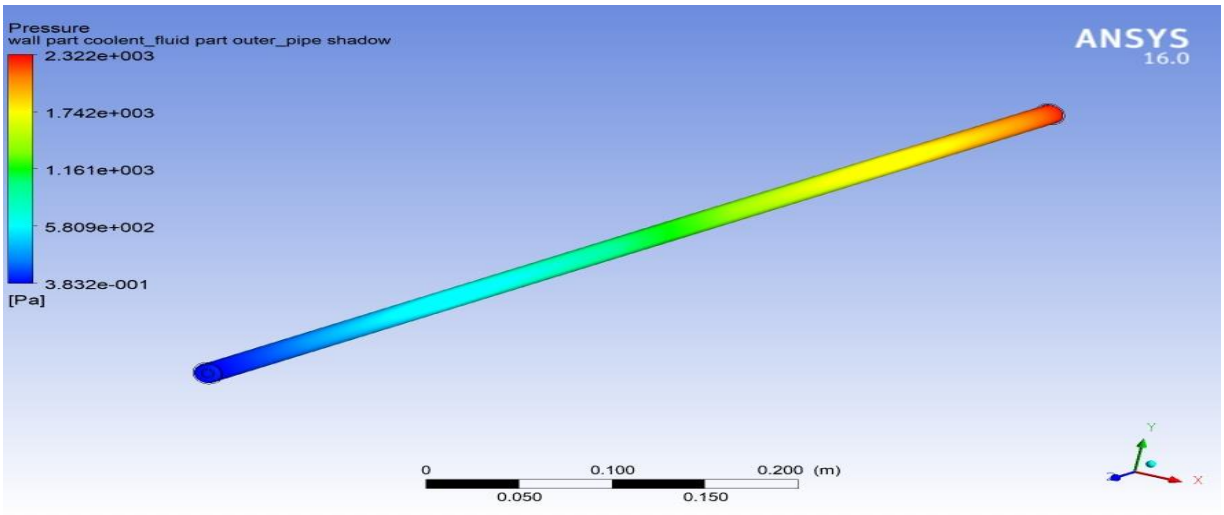

Fig.7: Cold fluid pressure contour at Re number 6000 and 0.5% concentration.

6. Conclusion: Use of Nanofluids as a coolant in concentric tube heat exchanger shows enhancement in overall heat transfer coefficient and heat transfer rate, but there is also increment in pressure loss which required more pumping power. Results shows 7.2%, 13.58% and 21.38% enhancement in overall heat transfer coefficient at 0.5%, 1.5% and 2.5% volume concentration of nanofluids respectively over the base fluid and 6.11%, 12.45% and 17.27% enhancement in heat transfer rate at 0.5%, 1.5% and 2.5% volume concentration of nanofluids respectively over the base fluid. Also 5.15%, 9.13% and 14.88% increment in pressure lose for 0.5%, 1.5% and 2.5% volume concentration of nanofluids over the base fluids observed. In this project CFD analysis of nanofluids is done by considering nanofluids as a single phase homogeneous mixture of nanoparticle and base fluids, but for more accurate result Two phase mixture analysis are required.

Abbreviations

Al_2O_3	Alumina	H_2O	Water
K_{nf}	Nanofluids Thermal conductivity	Cu	Copper
C_{nf}	Nanoluids specific heat	Num.	Numerical
μ_{nf}	Nanofluids viscosity	CuO	Copper dioxide
ρ_{nf}	Nanofluids density	SiO_2	Silicon
φ_{nf}	Nanofluids volume concentration	TiO_2	Titanium dioxide
CFD	Computational fluid dynamics	EG	Ethylene glycol

References

[1] Mohammad Sikindar Baba, A.V. Sita Rama Raju, M. Bhagvanth "Heat transfer enhancement and pressure drop of Fe_3O_4 -water nanofluid in a double tube counter flow heat exchanger with internal longitudinal fins" Case Studies in Thermal Engineering 12 (2018) 600–607.

[2] D.Han, W.F. He "Experimental study of heat transfer enhancement using nanofluid in double tube heat exchanger" UK Energy Procedia 142 (2017) 2547–2553.

[3] K. Palanisamy, P.C. Mukesh Kumar "Experimental investigation on convective heat transfer and pressure drop of cone helically coiled tube heat exchanger using carbon nanotubes/water nanofluids" Heliyon 5 (2019) 1146-1154.

[4] P.C. Mukesh Kumar, M. Chandrasekar "CFD analysis on heat and flow characteristics of double helically coiled tube heat exchanger handling MWCNT/water nanofluids" Heliyon 5 (2019), 20-30.

[5] Mohammad Hussein Bahmani, Ghanbarali Sheikhzadeh, Majid Zarringhalam, Omid Ali Akbari "Investigation of turbulent heat transfer and nanofluid flow in a double pipe heat exchanger" Advanced Powder Technology (2017) 415-420.

[6] Ali H. Abdelrazek, Omer A. Alawib, S.N. Kazia, Nukman Yusoffa, Zaira Chowdhuryd, Ahmed A.D. Sarhane "A new approach to evaluate the impact of thermophysical properties of nanofluids on heat transfer and pressure drop" International Communications in Heat and Mass Transfer 95 (2018) 161–170.

[7] Suleiman Akilu, K.V.Sharma, AkliluTesfamichael Baheta, Rizalman Mamat "A review of thermos-physical properties of water based composite nanofluids" Renewable and Sustainable Energy Reviews 66 (2016) 654–678.