CFD ANALYSIS OF HEAT SINK AND OPTIMIZATION OF DIFFERENT PROCESS PARAMETERS ON WHICH HEAT TRANSFER DEPENDS

[1]Dhruvraj Singh, [2]H.S. Sahu

[1]Student, [2]Assistant Professor
Millennium Institute of Technology, Bhopal

***Abstract*: To increase heat transfer from heat sink, here in this work it perform the CFD analysis of heat sink and find out the effect of change in velocity that is 2, 4 and 6 m/s of air flowing over the heat sink to carry heat. Here it also calculates the effect of different material used for the construction of heat sink on heat transfer, for that it considered four different aluminium alloys that is AA-6063, AA-6061, AA-6060 and AA-1050. Through analysis it is found that material AA-1050 shows the maximum heat transfer as compared to other material. It also calculated the effect of different base thickness of heat sink and find the optimum thickness, for that here in this work it considered six different base thickness of heat sink that is 2, 4, 6, 8, 10 and 12 mm. through analysis it is found that heat sink having 2 mm base thickness shows maximum heat transfer.**

Keywords: heat sink, thermal resistance, Nusselt number, base thickness, fins

1. Introduction

Heat sink is basically used as a secondary medium to transfer heat, heat generated at different equipment's or any other electronic devices were first transfer to heat sink through conduction and then through heat sink it is transfer in to environment through convection. Many parameters of heat sink were responsible to transfer heat, types of fin, manufacturing material, velocity of air, base thickness, Number of fins and spacing in between them and many others. So in order to increase the heat transfer rate and to reduce the thermal resistance here in this work, it calculated the effect of different material used to construct the heat sink. For finding the effect of different material on heat transfer, it considered four different aluminium alloys to manufacture heat sink that is AA-6063, AA-6061, AA-6060 and AA-1050. After finding the effect of different material, here in this work it also calculates the effect of different base thickness of heat sink. To calculate the effect of base thickness of heat sink here it considered six different base thicknesses that are 2, 4, 6, 8, 10 and 12 mm and optimize the base thickness of heat sink. The analysis of heat sink for different material and base thickness were perform in the below section.

2. Development of solid model

For performing CFD analysis it has to first develop the solid model of heat sink on the basis of geometrical parameters considered during experimental analysis performed by Yoon et.al [1]. Based on that parameters it develop the solid model, the geometric parameters of heat sink is shown in the below table.

Table.1 Geometric parameters of heat sink

Parameters	values
Length of complete channel	450 mm
Base thickness (t_b)	8 mm
Heat sink fin thickness	3 mm
Total height of heat sink	50 mm
Length and width of heat sink	150 mm
Width of heat source	60 mm

Based on the above geometric parameter solid model of heat sink developed. The solid model of heat sink is shown in the below fig.

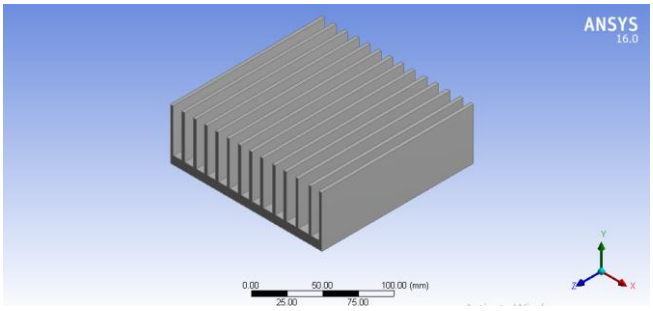

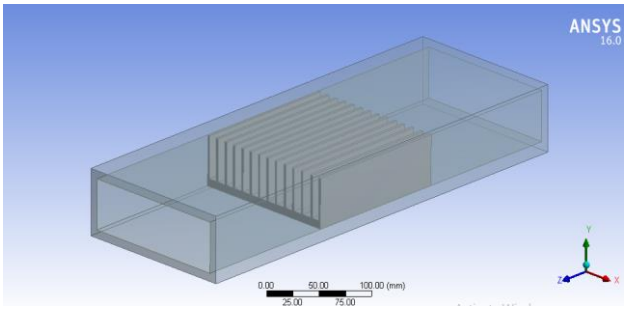

Fig.1 solid model of heat sink

3. Meshing

For performing Numerical analysis, first complete body is discretized in to number of elements and node. Simulation work on the number of nodes and elements, mesh of the solid model of heat sink is shown in the below fig.

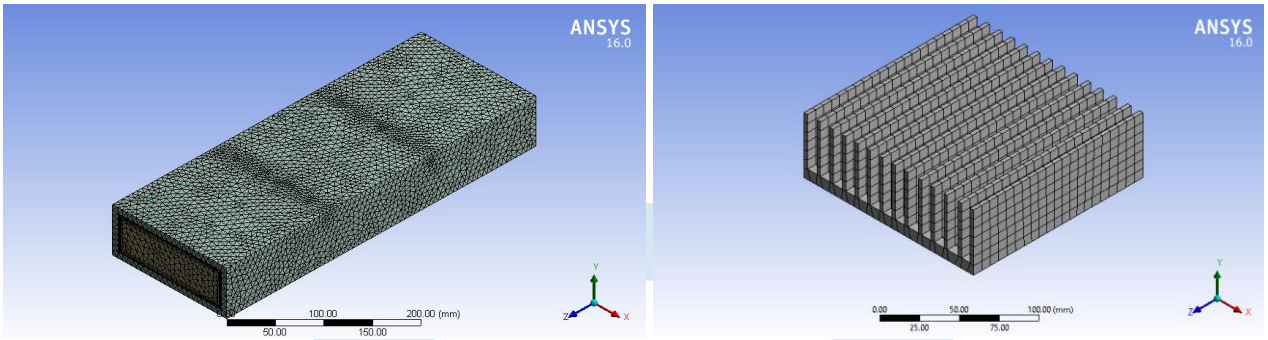

Fig.2 mesh of the solid model of heat sink

For getting good results it refines the mesh, in this work the solid model of heat sink is discretize in to 162699 number of element. The mesh having number of elements and nodes considered for analysis is shown in the below fig.

4. Boundary condition

During the analysis the velocity of air moving inside the domain vary from 2, 4 and 6 m/s, whereas the temperature of air at the inlet of domain is 25^0 C. heat sink inside the domain remain constant at a particular position. Whereas outer surface of domain act as a thermal insulator, and inside the domain no slip condition were applied. During the analysis the interface between heat sink and air were also considered as no slip condition. Heat generation at the chip was transfer to the heat sink at the base. Here in this work 100 W of heat is given to heat sink at a particular position.

In order to validate the CFD model of heat sink, here in this work it considered aluminium alloy AA-6063 for the manufacturing of heat sink as considered during experimental analysis performed in the base paper. Other boundary conditions that are velocity of air, heat flux were considered same as considered in base paper. For analyzing the effect of different velocity of air here in this work it considered three different velocity of air that is 2, 4 and 6 m/s.

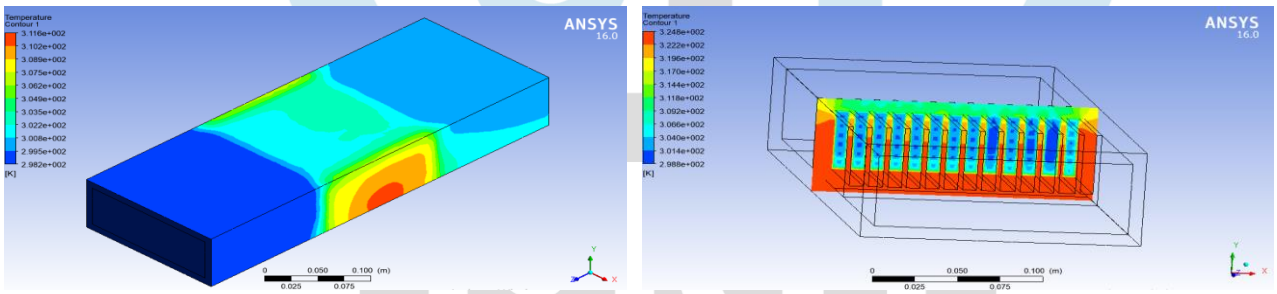

Fig.3 temperature contours for complete domain at 2 m/s velocity

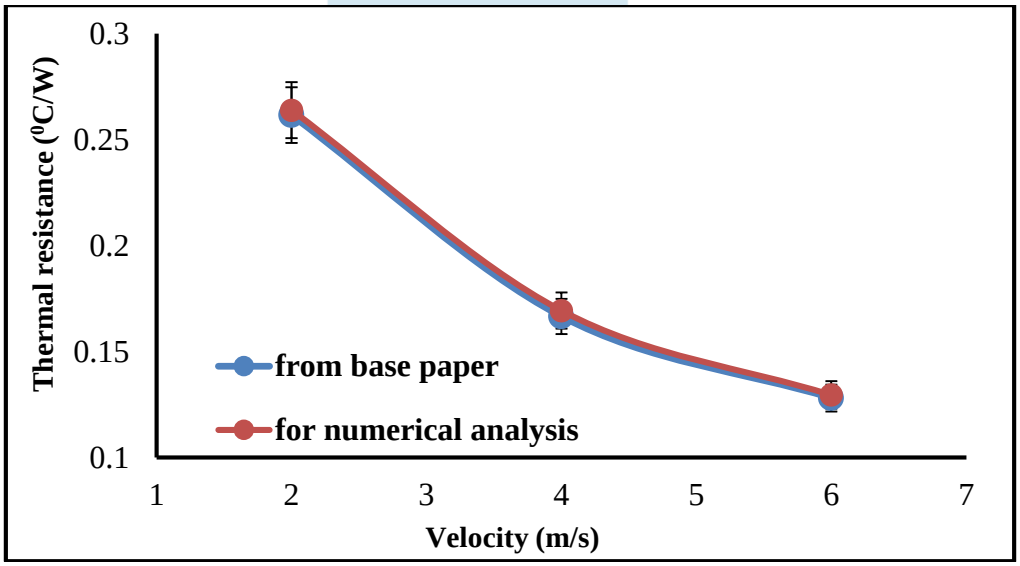

Fig.4 comparison of value of thermal resistance at different velocity of air for AA-6063 material

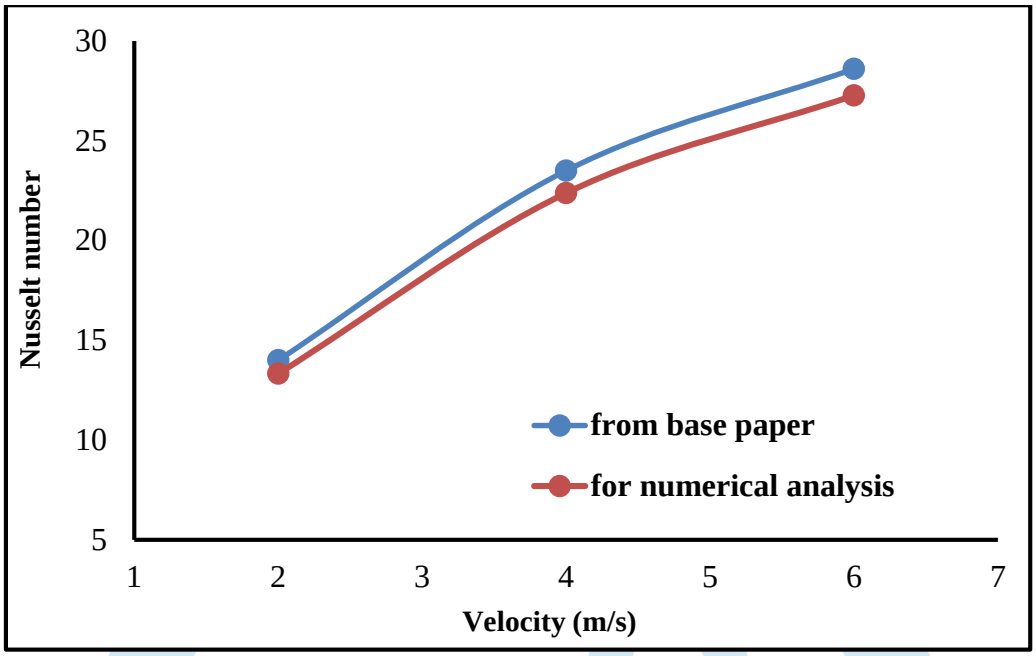

Fig.5 comparison of value of nusselt number for AA-6063 material

After calculating the value of thermal resistance, it also calculates the value of Nusselt number to measure heat transfer rate. For calculating the Nusselt number first it calculates the value of average heat transfer coefficient numerically and using this heat transfer coefficient and eq. 2, it calculates the value of Nusselt number for different velocity of air.

5. Comparison of different materials

After finding the temperature distribution and calculating the value of Nusselt number and thermal resistance for different velocity of air flowing inside the channel. Here it compares the value of Nusselt number and thermal resistance for different materials of heat sink. The comparison of value of thermal resistance for different material is shown in the below table. The comparison graph for different material were shown in the below fig.

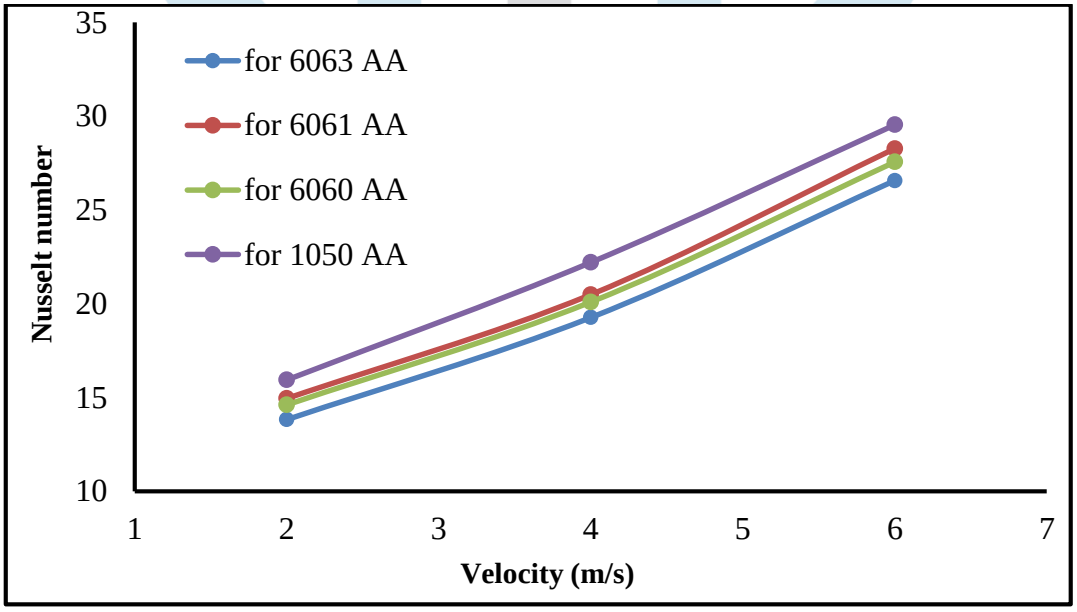

Fig.6 shows the comparison of value of Nusselt number for different materials of heat sink

Through graph it is found that the value of Nusselt number for AA-1050 material is higher than the other materials at all velocity of air flowing inside the chamber. The changes in Nusselt number for different material at different velocity of air follow the same nature. Here in this analysis it is found that AA-6063 material shows the minimum value of Nusselt number for different velocity of air. The thermal conductivity of AA-1050 material is higher than the other material whereas the density of this material is lesser as compared to others because of higher thermal conductivity AA-1050 material shows the heat transfer from heat sink then the other material.

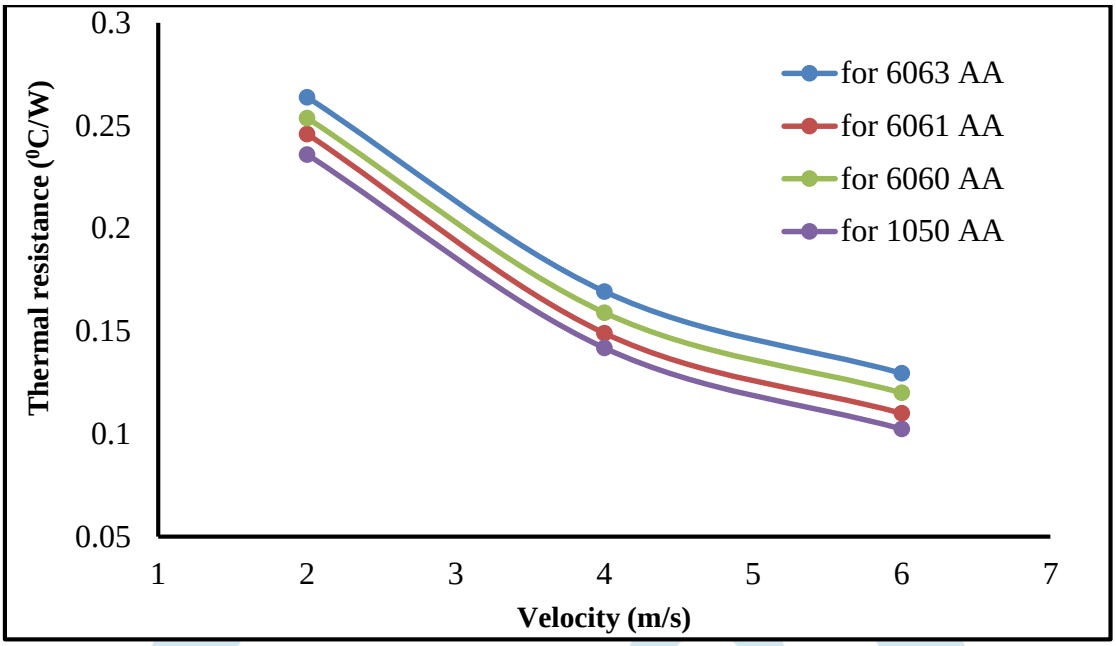

Fig.7 comparison of value of thermal resistance developed inside the heat sink

Through analysis it is found that as the Nusselt number of AA-1050 material heat sink is higher, the value of thermal resistance for this material lower than the other materials. Through analysis it is found that change in thermal resistance of heat sink with respect to velocity of air flowing inside the channel follow same nature of variation.

6. Effect of different base thickness of heat sink

After calculating the effect of different materials used to manufacture heat sink, here it also calculated the effect of base thickness of heat sink on heat transfer and thermal resistance. For calculating the effect of different base thickness of heat sink here it considered six different base thickness of heat sink. The base thickness of heat sink is denoted by t_b, the effect of different base thickness is shown in the below section.

Table. Shows the comparison of value of Nusselt Number for different base thickness heat sink

Velocity (m/s)	Nusselt number at t_b=2	Nusselt number at t_b=4	Nusselt number at t_b=6	Nusselt number at t_b=8	Nusselt number at t_b=10	Nusselt number at t_b=12
2	11.26	11.55	11.8	15.94	16.92	16.05
4	15.18	15.65	16.03	22.21	24.13	23.51
6	17.95	18.55	19.03	29.55	32.24	31.65

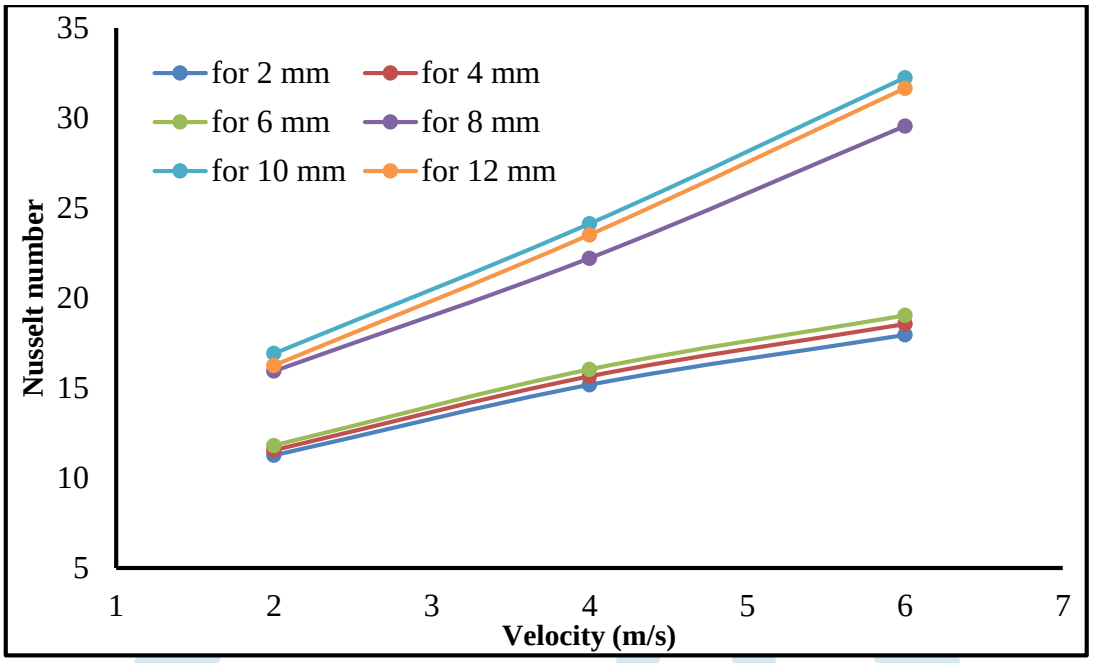

Fig.8 comparison of Nusselt number for different base thickness heat sink

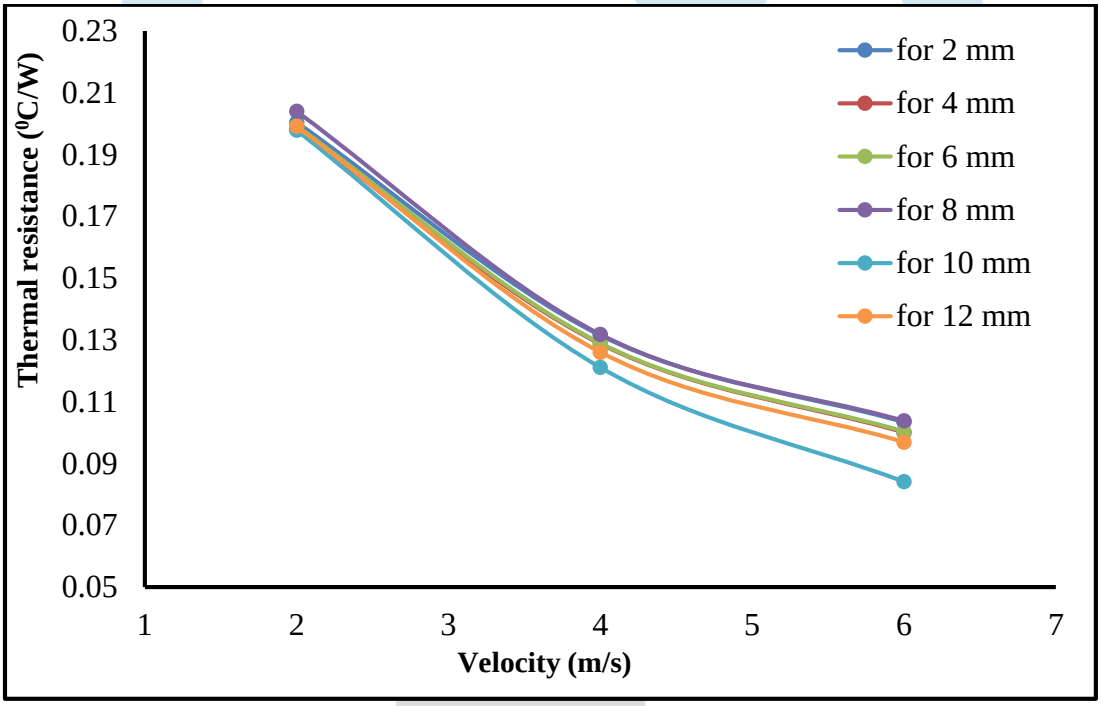

Fig.9 comparison of Nusslet number for different base thickness heat sink

From the above graph it is found that the value of Nusselt number is higher in case of heat sink having 10 mm base thickness, whereas other heat sink with different base thickness shows lesser value compare to 10 mm base thickness. So here it concludes that the heat transfer is maximum in case of 10 mm base thickness heat sink. Through thermal resistance graph it shows that 10 mm base thickness heat sink shows minimum thermal resistance. So heat sink having 10 mm base thickness is most efficient for heat transfer.

7. Conclusion

Through CFD analysis, temperature distribution inside the heat sink is calculated and based on temperature distribution profile different parameters of heat sink where optimize. Through analysis it is found that as the Nusselt number of AA-1050 material heat sink is higher as compared to other which means that heat transfer is maximum for this material. The value of thermal resistance for AA-1050 material is lower than the other materials used for heat sink manufacturing, thermal conductivity of AA-1050 material is higher than the other material due to this, and heat transfer is maximum for this material. Through analysis it is found that change in thermal resistance of heat sink with respect to velocity of air flowing inside the channel follow same nature of variation for all materials. As the velocity of air increases the value of thermal resistance of heat sink decreases. Heat sink having 10 mm base

thickness shows the maximum heat transfer as compared to other base thickness, whereas the thermal resistance is minimum for this heat sink.

References

[1] Youngchan Yoon, Seung-Jae Park, Dong Rip Kim, Kwan-Soo Lee (2018),"Thermal performance improvement based on the partial heating position of a heat sink", International Journal of Heat and Mass Transfer 124 (2018) 752–760.

[2] H.Y. Li, W.R. Liao, T.Y. Li, Y.Z. Chang (2017), "Application of vortex generators to heat transfer enhancement of a pin-fin heat sink", Int. J. Heat Mass Transf. 112 (2017) 940–949.

[3] Hung-Yi Li, Wan-Rong Liao, Tian-Yang Li , Yan-Zuo Chang (2017)," Application of vortex generators to heat transfer enhancement of a pin-fin heat sink", International Journal of Heat and Mass Transfer 112 (2017) 940–949.

[4] Srivathsan Sudhakar and Justin A. Weibel (2016), "Transient Analysis of Non-Uniform Heat Input Propagation through a Heat Sink Base", Proceedings of the ASME 2016 International Mechanical Engineering Congress and Exposition IMECE2016.

[5] C. Anbumeenakshi, M.R. Thansekhar, (2016),"On the Effectiveness of a Nanofluid Cooled Microchannel Heat Sink under Non-uniform Heating Condition",http://dx.doi.org/10.1016/j.applthermaleng.2016.11.144.

[6] W. Wan, D. Deng, Q. Huang, T. Zeng, Y. Huang (2016), "Experimental study and optimization of pin fin shapes in flow boiling of micro pin fin heat sinks", Appl. Therm. Eng. 114 (2017) 436–449.

[7] Akshendra Soni1 (2016)," Study of Thermal Performance between Plate-fin, Pin-fin and Elliptical Fin Heat Sinks in Closed Enclosure under Natural Convection", DOI 10.17148/IARJSET.2016.31126.

[8] María Cristina Riofrio, Nadia Caney, Jean-Antoine Gruss (2016)," State of the art of efficient pumped two-phase flow cooling technologies", http://dx.doi.org/10.1016/j.applthermaleng. 2016.05.061.

[9] Wei Wan, Daxiang Deng, Qingsong Huang, Tao Zeng, Yue Huang (2016)," Experimental study and optimization of pin fin shapes in flow boiling of micro pin fin heat sinks", http://dx.doi.org/10.1016/j.applthermaleng.2016.11.182.

[10] Bin Li, Sora Jeon, Chan Byon (2016)," Investigation of natural convection heat transfer around a radial heat sink with a perforated ring", International Journal of Heat and Mass Transfer 97 (2016) 705–711.

[11] B. Li, S. Jeon, C. Byon (2016), "Investigation of natural convection heat transfer around a radial heat sink with a perforated ring", Int. J. Heat Mass Transf. 97 (2016) 705– 711.

[12] H. Li, Y. He, Y. Hu, B. Jiang, Y. Huang (2015), "Thermophysical and natural convection characteristics of ethylene glycol and water mixture based ZnO nanofluids", Int. J. Heat Mass Transf. 91 (2015) 385–389.

[13] Weerapun Duangthongsuk, Somchai Wongwises (2015),"A Comparison of the Heat Transfer Performance and Pressure Drop of Nanofluid- Cooled Heat Sinks with Different Miniature Pin Fin Configurations", Experimental Thermal and Fluid Science (2015), http://dx.doi.org/10.1016/j.expthermflusci.2015.07.019.

[14] Yong Jiun Lee, Pawan K. Singh , Poh Seng Lee (2015)," Fluid flow and heat transfer investigations on enhanced microchannel heat sink using oblique fins with parametric study", International Journal of Heat and Mass Transfer 81 (2015) 325–336.

[15] Haoran Li, Yurong He , Yanwei Hu, Baocheng Jiang, Yimin Huang (2015)," Thermophysical and natural convection characteristics of ethylene glycol and water mixture based ZnO nanofluids", International Journal of Heat and Mass Transfer 91 (2015) 385–389.

[16] Seung-Jae Park, Daeseok Jang, Kwan-Soo Lee (2015)," Thermal performance improvement of a radial heat sink with a hollow cylinder for LED downlight applications", International Journal of Heat and Mass Transfer 89 (2015) 1184–1189.

[17] Daeseok Jang, Se-Jin Yook, Kwan-Soo Lee (2014)," Optimum design of a radial heat sink with a fin-height profile for high-power LED lighting applications", Applied Energy 116 (2014) 260–268.

[18] Chan- Kai Liu, Shu-Jung Yang, Yu- Lin Chao, Chi- Chuan Wang (2013), "Effect of non-uniform heating on the performance of the microchannel heat sinks", International communications in Heat and Mass Transfer, 43 (2013), 57-62.

[19] Cheng-Hung Huang ,Yu-Hsiang Chen , Hung-Yi Li (2013),"An impingement heat sink module design problem in determining\ optimal non-uniform fin widths", International Journal of Heat and Mass Transfer 67 (2013) 992–1006.

[20] Chander Shekhar Sharma a, Manish K. Tiwari a, Bruno Michel b, Dimos Poulikakos (2013)," Thermofluidics and energetics of a manifold microchannel heat sink for electronics with recovered hot water as working fluid", International Journal of Heat and Mass Transfer 58 (2013) 135–151.