EYE MONITORING WHEELCHAIR USING RASPBERRY PI

Miss. Maind Pallavi R[1], Miss.Mane Pooja A[2], Miss.Nanaware Asha B[3], Mr.kale Santosh D[4]

[1,2,3]Students, [4]Professor
S.V.P.M 'S College of Engineering, Malegaon (Bk), Baramati

***Abstract*: The purpose of this system is to develop a wheelchair that will be controlled by the eyes of the person seated in the wheelchair. The developed system will be permissive the paralyzed & physically handicapped people to control wheelchair without the help of other people. The web camera is mounted in front of the user, a mounted camera will track eye movement & control a wheelchair to go forward, left, & right .we have included sensor on the front of the wheelchair for obstacle detection .In this system two individual motors are fixed on each wheel. L293D driver is used to control these two motors. Emergency switch is used to stop wheelchair immediately. To control this whole system here raspberry pi board are used.**

***keywords*— Raspberry pi, Python, web camera , ultrasonic sensor ,Emergency switch, DC motor, Wheel chair.**

1.INTRODUCTION

Eye monitoring wheelchair is a system for a people who are physically disable or paralyzed. This Eye monitoring wheelchair system makes their life more efficient and to provide them opportunity of independence. Eye monitoring wheelchair system is developed using camera for capturing the image. But someone required attention on itself, so here we use emergency switch to stop. Camera captured the image in real time based on face, eye and eye pupil detection with minimum delay of time and analyze the image as input to interface the motor driver IC, to perform the different operation such as left, right, forward stop. Image processing open computer vision library is used for face and eye detection.

Raspberry pi board is soul of the system, which control the complete system operation. Image processing based data signal sent to the raspberry pi, raspberry pi received the data and analyze it and send the control signal to motor driving circuit, based on the location of eye pupil. This will decide motor run either in clockwise or anticlockwise direction or stop. Two individual motors are fixed on each wheel [1].

2.LITERATURE SURVEY

There were many previous works carried out on the electric wheelchair.

In (1),voice based method which use users voice as source input.voice is convert into digital form. But in that voice are come from surrounding will affect the model,but in our project there is usedeye based method in that we can detect only image of user.

In (2),ARM based wheelchair control system. It does not take real time image and in our system we can take image at real time with minimum delay.

In (3),head gesture based wheelchair control system ,it is expensive and they take to much time to get up the speed and in our system we take image very fastly with less movement of eye.

In (4),wheelchair operated by tounge motion. In that wheelchair is operated at tounge motion but the problem is that movement of tounge is very difficult and in our project motion of eye is very easy.

In (5),Eyeball Motion Controlled Wheelchair Using IR Sensors . In that IR sensor is mounted on eye frame. This frame analyze the movement of the eye. And in our project detection of the image is on the eye,there is not use of eye frame

3.BLOCK DIAGRAM

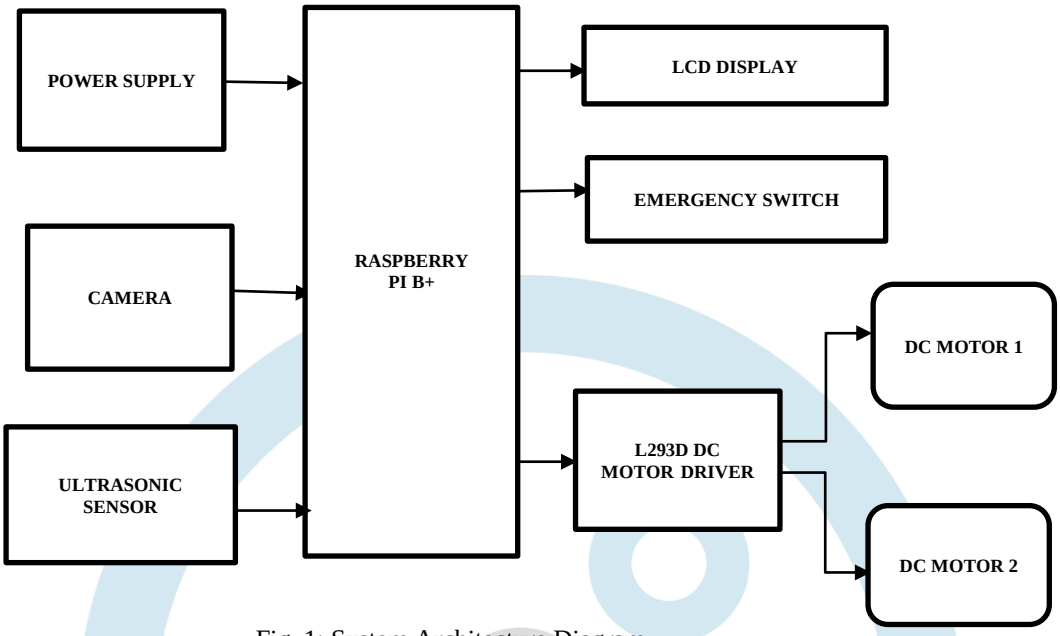

Fig. 1: System Architecture Diagram

3.1 BLOCK DIAGRAM DESCRIPTION

A. RASPBERRY Pi:

Raspberry pi board is heart of the project. Raspberry pi board have Linux based operating system which is known as raspbian and compatible with raspberry pi board. A real time data receive and determine the digital data by raspberry pi B+ model board, which is very efficiently work with the multiple images. Raspberry pi sends the command to motor driver which is enabling the GPIO pin to raspberry pi [1]

B. Webcam:

.
Webcam is a hardware camera that captures either still pictures or motion video of user .Web camera is a digital camera that's connected to a computer. It can send live pictures. for interfacing a camera with raspberry pi board UV4L driver is required

C. Ultrasonic sensor:

Ultrasonic sensor is used for detecting obstacle, which comes in the path of wheelchair. Sensor is directly connected to the raspberry pi board. [2]. If any obstacle is detected very close to wheelchair, motors will stop to run the wheels. [2]

D. DC motors:

In this project Two 12 v DC motors is used to move wheelchair in left, right and forward direction. L293D motor driver allows Dc motor to drive on either direction L293D is 16 pin IC which can control a set of two DC motor simultaneously in any direction so that to control two DC motor here use L293D IC.

3.2 SOFTWARE DESCRIPTION

A. Open CV image library:

Open CV (Open Source Computer Vision) is a library of programming function mainly aimed at real-time computer vision. Open CV is released under a BSD license and free for both academic and commercial use. It has C++, C, Python and Java interfaces and supports Windows, Linux, Mac OS, iOS and Android. Open CV was designed for computational efficiency and with a strong focus on real time application.

B. Python language:

Python is an interpreter, object oriented, high level programming language for general-purpose programming. Its high level built in data structures, combined with dynamic typing and dynamic binding; make it very attractive for rapid application development. Python's easy to learn syntax emphasizes readability and therefore reduce the cost of program maintenance. The fast edit – test –debug cycle makes this very effective. Moreover Matlab is used for coding but it is quite expensive and algorithms are proprietary, math work puts restriction on code portability

4. DESIGN METHOD

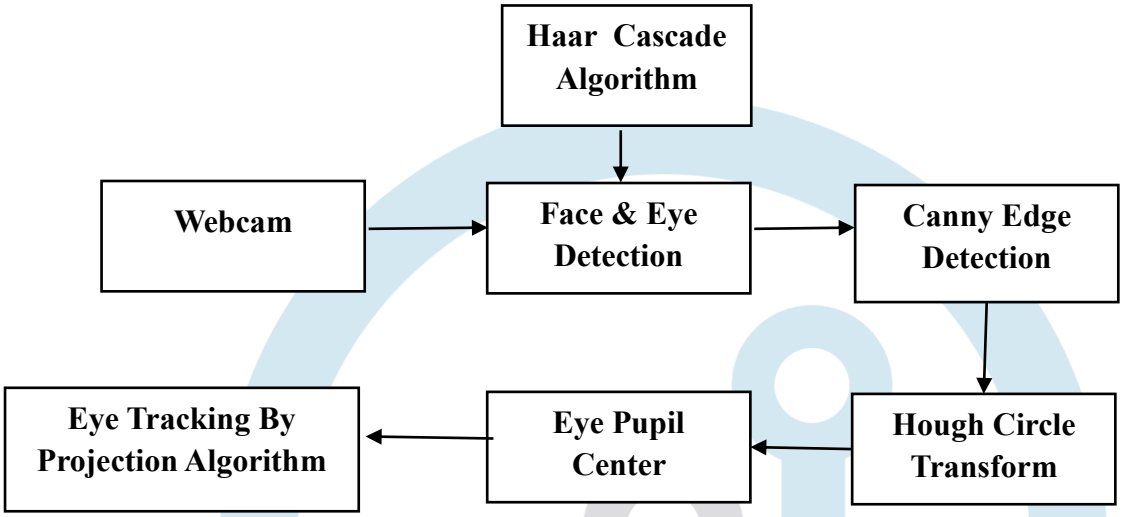

Fig..Design method

In our system open computer vision (OpenCV) free access library algorithm used for Image processing. The OpenCV library plays a very important role, and it gives the knowledge of Image processing

A. Face & Eye detection:

Our first aim is to detect user face & eye accurately. If there are multiple faces, it will show the error. So we can use Haar cascade algorithm to detect face & eye individually, it make rectangular on face. After detection of face, it will try to detect the eye on the face and draw the rectangular box on the eye [2]. To detect the eye pupil and centre points is our main goal of the system.

B. Canny Edge Detection:

Then we applied canny edge detection method to detect the eye corner. Average of these two points indicates the centre point. minimum distance indicates the eye pupil in left and maximum value indicates the eye pupil indicate in right. If in these system there is no movement of eye it will indicates eye is in centre position [2}To measure the distance between the centre point and eye circle centre point using coordinates system[4].

C. Hough transform:

Hough transform is used to draw circle on eye pupil, it is used to detect movement of eye pupil .Camera capture the images continuously and according to eye movement, a Hough circle transform detects the movements of eye pupil and drawing the circles[4].

D. Eye Tracking:

To track the Eye movements we use projection function algorithm was used, where the coordinates system points the eye center point location [2] [4].
The horizontal and vertical axis based two directional graph represents the eye movements in left or right direction. And detects average point of eye pupil location. A captured Projection function graph shows relation between the eye center and respective projection points. The X and Y scale points indicates the directions of the eye movements [4]

The eyeball position at the (A0, B0) point is:

A0=(A1+A2)/2

B0=(B1+B2)/2

Where the A2 and A1 is the corner point of the eye pupil, and A1 and A2 indicates the corner points of the eye in X direction. In vertically B1 and B2 indicates the corner of the eye pupil in Y direction. The coordinate points (A0, B0) represents the actual eye location. And based on that system send the commands for wheelchair movements [2][4].

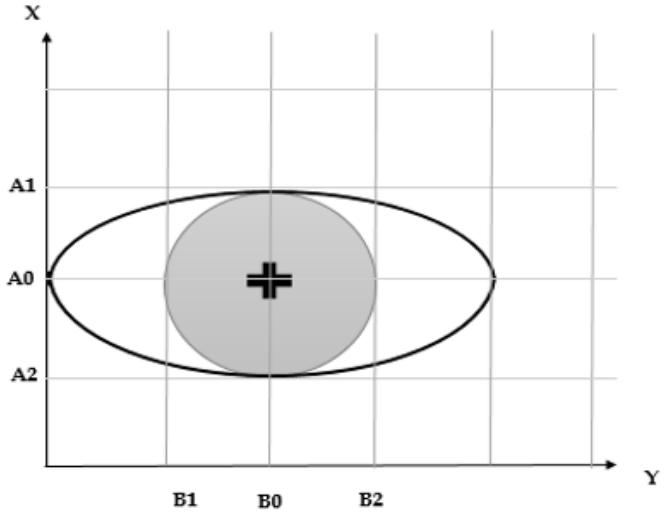

5. FLOWCHART

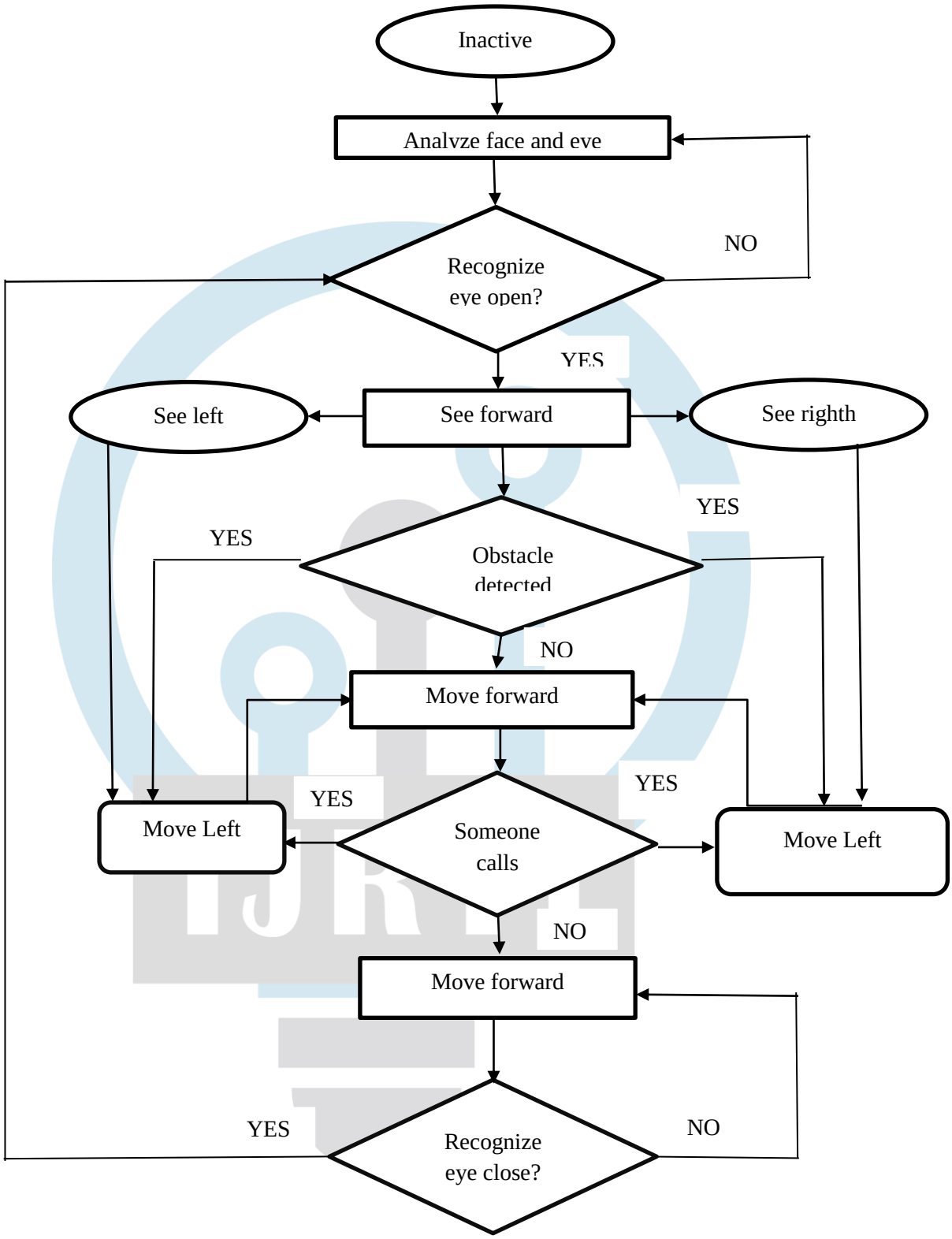
Inactive
Analvze face and eve
Recognize
eye open?
NO
YES
See left
See forward
See righth
YES
YES
Obstacle
detected
NO
Move forward
YES
YES
Move Left
Someone
calls
Move Left
NO
Move forward
YES
NO
Recognize
eye close?

6.RESULT

According to the position of eye pupil the wheelchair moves in left, right & forward direction. Eye monitor system which allows movement of user wheelchair depending on the eye movement.

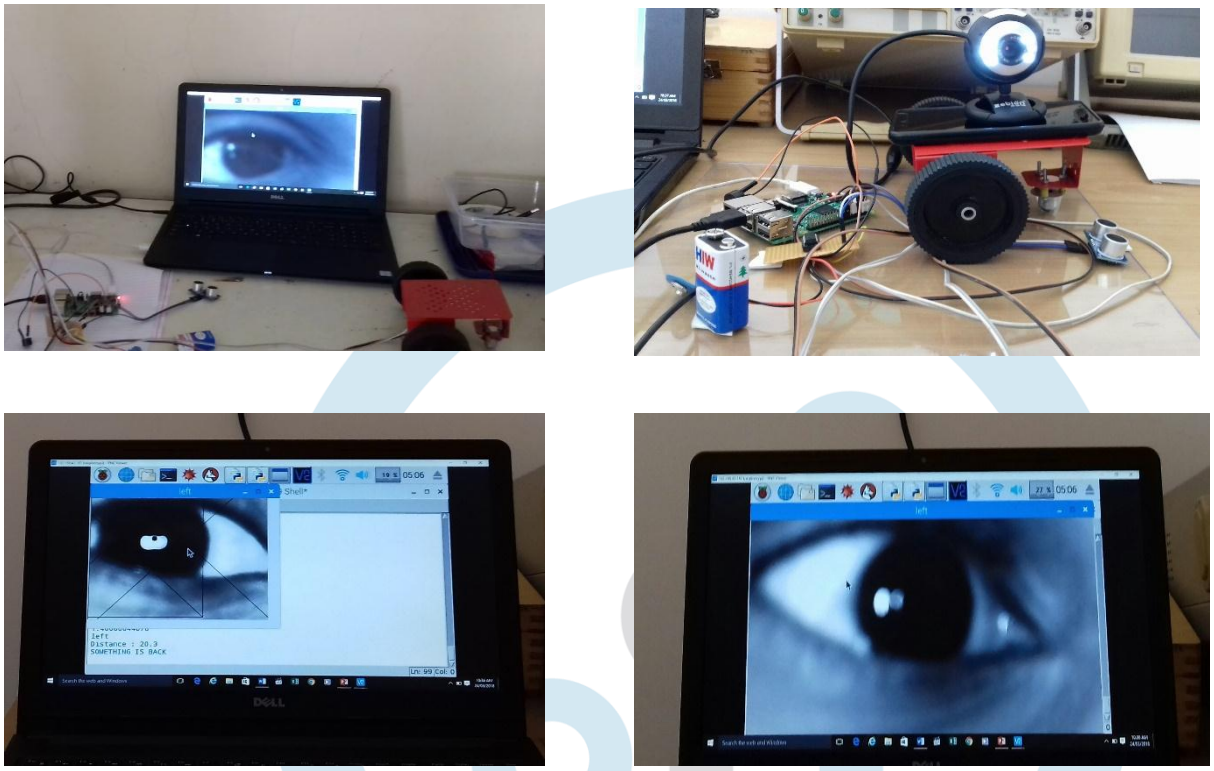

Fig. Output of system

7. FUTURE WORK

Need to work on wheelchair movement when the person just casually seeing in different direction.
To make the system more interact with patient we need to add some additional sensors.

8.ACKNOWLEDGEMENT

We would like to thank our guide Prof.S.D.Kale of E&TC department,for the valuable guidance and constructive suggestions.this helps us in making our project.

9.CONCLUSION

Eyeball operating wheelchair system is developed for physically handicapped & paralyzed people to make their life independent. Raspberry pi board are used to control this whole system. Web camera is used for capturing the image. Eye ball operating wheelchair system is controlled by eye pupil movement and emergency switch. According to the position of eye pupil the wheelchair moves in left, right & forward direction. Dark light area affects the performance of wheelchair, difficult to track the eye pupil in dark light.

REFERANCES

[1] Eye Monitored Wheelchair System Using Raspberry Pi Athulya.T.Manayil1, Beneeta Rozario2, Bheema Beevi T.N3, Davood.I4, Arun Shaji B.K5 International Journal of Innovative Research in Science, Engineering and Technology, March 2017

[2] Automatic Camera Based Eye Controlled Wheelchair System Using Raspberry Pi Dulari Sahu International Journal of Science, Engineering and Technology Research (IJSETR), Volume 5, Issue 1, January 2016

[3] Eye Movement Controlled Wheel Chair Roshani D. Ninama1 (ME Student), Rutu P. Nayak2 (Assistant Professor) International Journal For Technological Research In Engineering Volume 1, Issue 9, May-2014

[4] Autonomous Camera based Eye Controlled Wheelchair system using Raspberry-Pi Shyam Narayan Patel (PG Student)V. Prakash (Assistant Professor) IEEE Sponsored 2nd International Conference on Innovations in Information Embedded and Communication Systems ICIIECS'15

[5] Eye Movement Based Electronic Wheel Chair For Physically Challenged Person, Gunda Gautam, Gunda Sumanth, Karthikeyan K C, Shyam Sundar, D.Venkataraman , International Journal Of Scientific & Technology Research Volume 3, Issue 2, February 2014 .

[6] SensorsBased Automated Wheelchair, D.Hareesh1, R.Raja Kishore 2 , K.Satyavathi3, International Journal of Research in Computer and Communication Technology, Vol 2, Issue9,September-2013.

[7] ARM Based Wheelchair Controlled System, G. Vijaya Kumari1, R.Shalini2, S.Soundarya3, T.Sharmila4, International Journal of Innovative Research in Computer and Communication Engineering , Issue 3, March 2017.

[8] Head Gesture Based Wheelchair Control and Cardiac Monitoring System, Divya Mohan1, Archana.G2, Gayathri.P3, Kavya.M4, Nivedha.V, International Journal of Engineering Science and Computing, April 2017