An Efficient Energy Distribution Method for Rural Parts of India

K. V. Jyothi Prakash

Assistant Professor
Siddaganga Institute of Technology, Tumakuru

***Abstract* - Electricity is one of the basic requirements of human being, which is widely used in Industrial, domestic and agricultural purposes. Due to rapid industrialization and urbanization there is a great demand for electricity and to meet this increased demand, the technologies like nuclear power plants, hydro electrical power plants, solar power plants, wind power plants etc. are implemented. Because of demand for power being greater than the power generated and various failures at the power generation centers or on the distribution front etc, the continuous distribution of power to all requirements all time poses various challenges and in some cases may be it is impossible. Therefore the proper utilization and efficient distribution of power is very important and is a challenge. Here in this paper we describe a method for the efficient distribution of power along with various additional features.**

I INTRODUCTION

Electricity is one of the basic requirements of human being, which is widely used in Industrial, domestic and agricultural purposes. Due to rapid industrialization and urbanization there is a great demand for electricity and to meet this increased demand, the technologies like nuclear power plants, hydro electrical power plants, solar power plants, wind power plants etc. are implemented. Because of demand for power being greater than the power generated and various failures at the power generation centers or on the distribution front etc, the continuous distribution of power to all requirements all time poses various challenges and in some cases may be it is impossible. Therefore the proper utilization and efficient distribution of power is very important and is a challenge.

The usage of power for domestic purpose, industrial purpose and agricultural purpose vary and the distribution needs to be supported accordingly. Power requirement of different customer differs based on the nature of the customer such as industry, hospital, house etc. Since the power generated is less than the demand, continuous power distribution is impossible. Such a situation leads to scheduled power cuts to various regions while other regions are provided with power, and this region wise power control is basically due to the existing power distribution system having control station for such regions only.

The regions that are enforced with power cuts may have customer, requiring power at high priority such as hospital or industry in which a power failure is not desirable. But the existing distribution method fails to provide power for such customers based on the priority irrespective of the region they are located, and also the existing distribution system fails to provide a minimum power to every customer continuously all the time.

In order to provide a proper power distribution that ensure a minimum power to each destination and to provide power based on the priority irrespective of the location/region it belongs to, an infrastructure enabling such features is needed. Here in this paper we describe a method for the efficient distribution of energy that over come the limitations noted above and provide various additional features like automatic billing, display of day to day power usage at customer premises, complaint from the customer to the MSSU through data communication, power theft monitoring, temporary excess power allocation, disconnection of power during overdue of bill etc.. The proposed solution forms a basic backbone for atomization and integration of power distribution system with latest technologies.

II PRESENT POWER DISTRIBUTION METHOD

The power distribution in the existing distribution method is done in multiple stages as shown in figure 1 below.

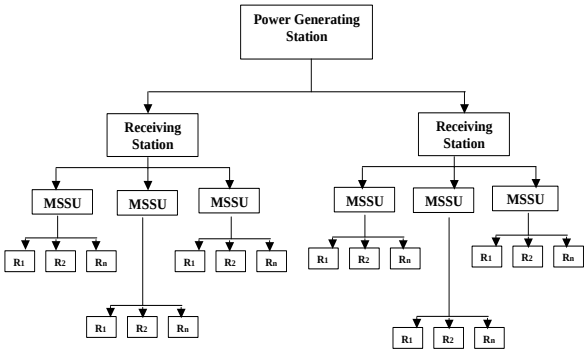

Figure 1 : Prior Power Distribution Scenario

Power generation center may represent a power originating center for distribution. The receiving station represents a intermediate center where the power levels are adjusted and transmitted to farther destinations. The master unit substation (MSSU) represents a final control center to control the power on different paths P1-PN laid to connect customers in the corresponding regions.

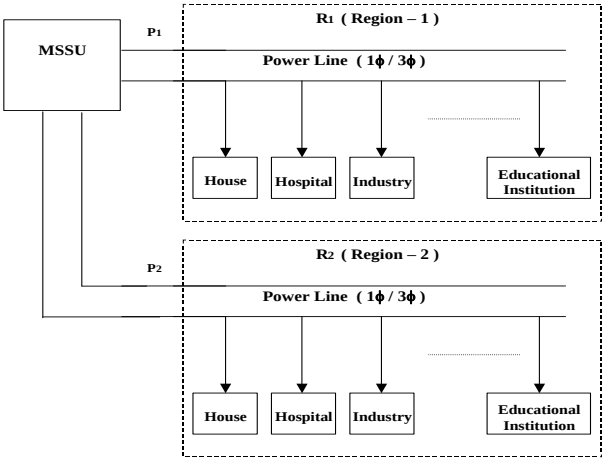

Each region R contains various customers having different power requirement with different priority. An example set of customers in each region is depicted in figure 2 below.

Figure 2 : Region wise power distribution method

The power line /path P1-Pn represents any conducting medium carrying power to the destination termination point at the customer premises. The power line/path may further comprise various power level converters such as transformer and breakers to temporarily disconnect a desired length of path from the power line for repair purpose etc.

Often MSSU control power on the various paths and contains breakers to disable power to a desired region by disabling power to the corresponding path. When power allocated to the MSSU is less than the requirement, MSSU may disable power on different paths P1-Pn in a specific manner or may disable in random.

Customers often do not interfere with the power line to draw the power and it is in some case treated as illegal. The path/power line P1-Pn is terminated at each customer premises entry point as shown in the figure 3. Entry point comprises energy meter, circuit breakers such as ELCB, MCB etc., and fuses. Customer receives power from the entry point.

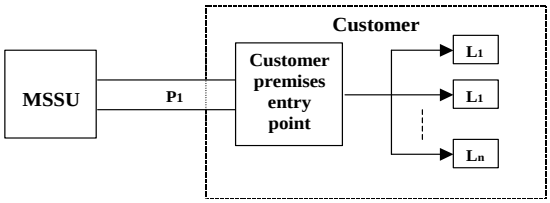

Figure 3 : Power utilization at customer point

As shown in figure 1, 2 and 3 the power generated is distributed to the customer through the receiving stations and MSSU. At the MSSU the power distribution to the customers is region wise ie at a time the MSSU will power few regions where for the other regions the power will be disconnected.

Accordingly in the prior system whenever there is a power cut/disabling power on any one/more paths all the customers of that particular region will suffer from no power irrespective of the customer priority. Further a continuous minimum power supply is not possible as there is no mechanism to control the power usage by the customer. In the present distribution method there is no restriction to the customer for the power utilization, except for the maximum current limiting devices such as MCB and ELCB used for safety purposes.

It is not possible to provide individual priority for customers like hospitals, educational institutions, Industries etc. Hence with the prior power termination method the customers (like hospitals, educational institutions, industries) who need continuous power supply will suffer during power cut. In the prior power distribution method the power termination is done region wise at the MSSU irrespective of the customer requirement. Therefore the controllability is not up to the end user. From the figure 2 it is clear that in a region there will be different types of customers with different power requirement. For example the hospital demands continuous power, a house need more power during morning time, a industry need large power always etc. hence there should be priority and adaptability in the power distribution system.

Further, in the prior distribution method if we need to provide continuous power for a particular customer who need uninterrupted power supply, and then it is necessary to install a separate path from the MSSU to that customer, which needs lot of infrastructure requirement at additional cost.

In the prior method of power distribution if the power has to be disconnected for a customer who will have overdue of power charges, then manual disconnection of power at the customer point has to be done. The power reconnection should also be done manually. Where as in the proposed system sitting at the distribution station (MSSU) the power disconnection or reconnection can be done very easily.

III PROPOSED POWER DISTRIBUTION METHOD

In the proposed power distribution method along with the existing infrastructure additional intelligent systems are installed at power generating station, receiving station, MSSU and customer. The system installed at power generating station is termed as master unit, the system installed at receiving station and MSSU is termed as master unit substation and the system installed at each customer is termed as customer premises equipment or slave unit.

The following are the steps illustrating the manner in which power distribution control is implemented.

In step 1, a master unit installed at generating station will allocate the power to different receiving stations based on the power requirement by each receiving station and the power generated at the generating station.

In step 2, the master unit substation installed at every receiving station will allocate power to different MSSUs based on their requirement and the availability of power.

In step 3, the master unit substation determines and allocates a maximum power that a particular customer can use for a given period of time. The maximum power allocated to a customer for a given period of time may be based on the priority, a minimum power, and/or other parameters in the customer records.

In step 4, Master control communicates the desired power level to customer entry point. The information communicated to the entry point may contain the power level limit , time duration and other customer identification parameters, queries to receive data from customer entry point. Etc.

In step 5, the customer premises equipment (slave unit) will allow only the maximum set power to be drawn by the customer in a desired time interval.

Above steps may be used further to communicate the desired information such as present allowed power limit, future forecast, customer records, to the customer.

Manner in which the steps indicated in figure 4 may be implemented as illustrated below.

A. Power Distribution Control Block Diagram

Figure 4 is a block diagram illustrating the novel power distribution control. The Block diagram shown comprises a master unit, master unit substation at receiving station and at MSSU, customer premises equipment, database and control network. Each component is described below in detail.

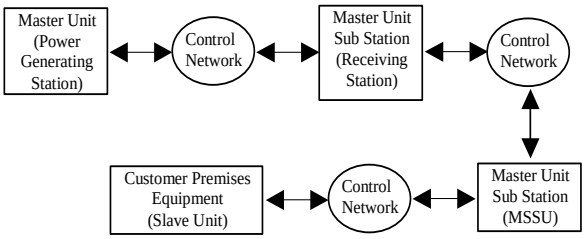

Figure 4 : Power Distribution control

The Master unit installed at generating station will allocate the power to different receiving stations based on the power requirement by each receiving station and the power generated at the generating station. The master unit substation installed at every receiving station will allocate power to different MSSUs based on their requirement and the availability of power.

The master unit substation at MSSU determines allowable power during a time period based on the customer data stored in the database. The power limit may be determined based on the priority and minimum power decided to be provided to all the customers and other data stored in the database. The determined power levels and other desired data is communicated to the customer premises equipment through the control network. Master control may also prompt customer entry point device to provide various information to customer through a user interface.

Control Network, represents a communication medium such as wired lines, wireless network, or any other communication network.

Customer premises equipment (Slave unit) receives the data representing the allowable power, and other data to ensure that the customer do not draw the power in excess of the determined power limit.

Customer premises equipment in addition to control the power usage may further comprise various sensors to sense the activity of the customer and the information hence derived may be communicated using the control network to the master control. For example, activity such as power theft, power consumed etc, may be sent to the master control for billing purpose. Further customer entry point device may comprise various user inter face to receive data from the user through the interface. Such data hence received may be communicated to the master control. Database stores the details of the customer, power requirements, priority details, power availability, power availability forecast etc. stored data is provided to the master control.

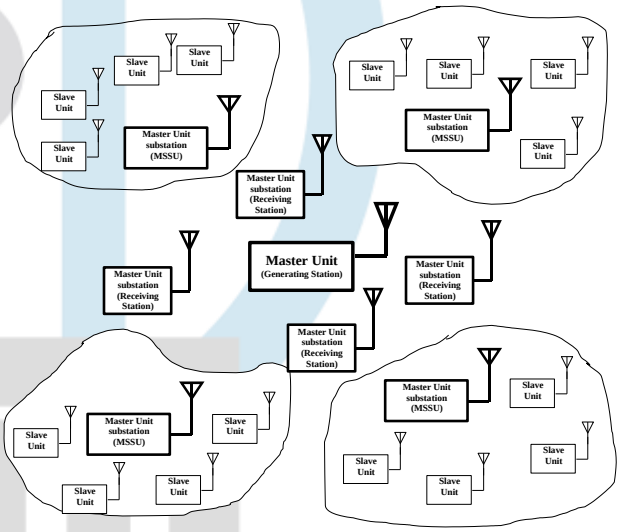

Figure 5. Proposed Wireless Control Network

In the proposed power termination method since all the customers are ensured with continuous power there will be no inconvenience to any customer by the power cut. If any one customer crosses the power consumption beyond the allocated power then the power disconnection will be done to that customer only without disturbing the other customers. The controllability is up to the end users. From the figure 4 we can understand that there will be always power at the entry point of the customer premises even when the power is disconnected to that customer during excess power drawn.

In the proposed distribution method each customer is restricted to utilize the power allocated by the master in substation as per the minimum requirement of the customer. Un interrupted power will be supplied when the customer is utilizing the minimum allocated power. When the utilization of power exceeds the minimum allocated power the supply will be disconnected to that customer with a notice. When the customer

reduces the power utilization below the minimum allocated power the supply will be restored as a result power supply is maintained at all time at each customer point. Further the excessive power or wastage of power maybe monitored electronically and may be avoided.

If the power disconnection has to be done to any customer during overdue of bill, it can be easily done at the MSSU itself just by allocating zero power to that customer, where the slave unit connected to that particular customer will disconnect the power.

B. An example control network

In the proposed power distribution method the master controller will be installed at the generating station. The master in substation will be installed at receiving station and MSSU. A slave unit will be connected to each customer that controls the power. The proposed wireless control technique is shown in figure 5 below

The master controller will allocate the power to the receiving stations based on the power generation. If the power generation at the generating station is reduced the master controller will communicate with the receiving stations and automatically reduces the allocated power to each receiving station. The masters in substations will allocate the power to the MSSUs. If there is any reduction in power allocation to the receiving station the master in substation will reduce allocation of power to all MSSUs..

Further the master in substation will allocate the power intelligently based on the demand by the user in a day. For example for domestic application more power supply during morning hours and less power supply during nighttime.

Each customer is restricted to utilize the power allocated by the master in substation as per the minimum requirement of the customer. Un interrupted power will be supplied when the customer is drawing the minimum allocated power. When the utilization of power exceeds the minimum allocated power the power sensing unit that is designed using any known method will indicate the slave unit the excess utilization of power and the slave unit will automatically break the supply. When the customer reduces the power utilization below the minimum allocated power the supply will be automatically restored, hence always the power utilization by the customer will be within the allocated power and the supply will be continuous.

Additional feature like complaint from the customer through data communication from slave unit to the MSSU can be implemented. Whenever there is a power theft by the customer the slave unit will indicate the MSSU so that legal action can be taken on the customer. Whenever the customer temporarily is in need of excess power can request MSSU through slave unit.

The data communication between the master unit, master substations and customer is established through a communication medium such as wired lines, wireless network, or any other communication network.

C. An example customer premises equipment

The figure 6 shown below is the block diagram of customer premises equipment (Slave unit) which consists of an RF trans receiver, a micro controller, peripheral interfaces like printer display etc., power measurement block, power switch and power supply / battery backup block.

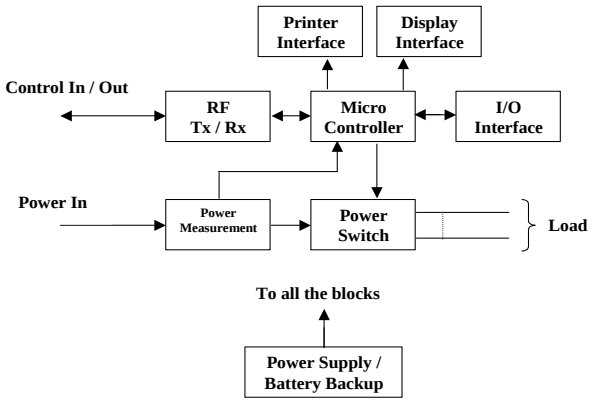

Figure 6 : Customer Premises Equipment (Slave unit)

Measurement of power plays a very important role in this project, the electromechanical energy meters have been the standard for measuring power earlier but these are now replaced by digital signal processor based energy meters. More accurate energy measurement and additional features are in fact accelerating the adoption of DSP based meters. Hence the power measurement block is designed by using an DSP based circuit. The power controlling to the load is done through a power relay, which acts as power switch.

A micro controller is used for the power measurement, controlling of power distribution, I/o devices and the display interface. The switches are connected for the control of different parameters through I/o interface.

An LCD display is used to display the different messages like the day to day power consumption, the bill for the power utilized and the status of power drawing by the load during the power distribution. The communication between the master in substation and the slave unit is done through radio link. The power supply / battery back up stage is used to provide different dc voltages to different sections of the circuit.

In this distribution method each customer is restricted to utilize the power allocated by the master in substation as per the minimum requirement of the customer. Un interrupted power will be supplied when the customer is utilizing the minimum allocated power. When the utilization of power exceeds the minimum allocated power the power measurement block will indicate the micro controller the excess utilization of power and the micro controller will instruct the power switch to break the supply. When the customer reduces the power utilization below the minimum allocated power the supply will be automatically on hence always the power

utilization by the customer will be within the allocated power and supply will be continuous.

Apart from this the slave unit will automatically generate the bill and prints the same. The display unit is provided to display the day to day power usage. Additional feature like complaint from the customer through data communication from slave unit to the MSSU can be implemented. Whenever there is a power theft by the customer the slave unit will indicate the MSSU so that legal action can be taken on the customer. Whenever the customer temporarily is in need of excess power can request MSSU through slave unit.

The data communication between the customer and master in substations is established through any medium such as wired lines, wireless network, or any other communication network.

IV CONCLUSION

Since the power requirement of different customer differs based on the nature of the customer such as industry, hospital, house etc. Such requirements often warrant priority for providing continuous power supply always. But with the present power distribution method it is not possible to supply power continuously to all the customers. Such a situation leads to scheduled power cuts to various regions while other regions are provided with power.

Thus by using this intelligent power distribution method each customer is assured a minimum power always. Each customer is restricted to utilize the power allocated by the master in substation as per the minimum requirement of the customer. Un interrupted power will be supplied when the customer is utilizing the minimum allocated power and priority to any customer can be easily provided.

Apart from this the slave unit will automatically generate the bill and prints the same. The display unit is provided to display the day to day power usage. Additional feature like complaint from the customer through data communication from slave unit to the MSSU can be implemented. Whenever there is a power theft by the customer the slave unit will indicate the MSSU so that legal action can be taken on the customer. Whenever the customer temporarily is in need of excess power can request MSSU through slave unit, which can be easily provided.

Hence by adopting this system the power distribution can be made efficient.

REFERENCE

[1] System specification of wireless power distribution control Ver. 1.0, M/s Dandamizz Research Group, 258, 9th Main Road, Srinivasanagar, Bangalore – 50