Experimental Study on Behavior of Stabilized Mud Blocks Using Fly ash and Quarry Dust

[1]Anil Kumar S,[2]Chandra S, [3]Sharath. M Y, [4]Theertharama N, [5]Vasipalli vamsi krishna reddy

[1]PG Student, Dept. of Civil Engg., AIT, Chikkamagluru, Karnataka, India
[2]Assistant Professor, Dept. of Civil Engg.,MIT, Kadakola Mysore, Karnataka, India
[3, 4&5]PG Students, Dept. of Civil Engg., AIT, Chikkamagluru, Karnataka, India

Abstract: **In the present study an effort have been made to study the strength properties and cost effectiveness of stabilized mud blocks using materials like mud, quarry dust, Fly ash and cement. Stabilized mud blocks are prepared in two different material proportions; one by replacing cement with fly ash and another one in is using cement, quarry dust, mud and fly ash. These mud blocks are prepared by using manually operated machine called MARDINI pressing machine. These prepared mud blocks are then tested for compressive strength in wet condition. SMB compressive strength and cost are compared with standard bricks strength and cost.**

***KEYWORDS*-Stabilized Mud Block(SMB),Quarry dust, Cement, Fly ash, Mud, Mardini Press and Wet compressive strength**

I. INTRODUCTION

Earth is the oldest material used by man. People have used their native ingenuity to develop forms for the utilization of earth ranging from the extremely simple to highly complex methodologies. They have used the material in response to varying resources, social needs and site conditions. With the individual revolution, people had access to machines, easily available fossil fuels and a range of newly developed materials. New technologies became popular and earth construction skills were lost or regulated to the vernacular builder. Impetus was given to earth architecture in the post-world war II era due to economic and energy saving concerns. However, as western nations worked their way to prosperity, the use of earth was eclipsed by a desire for modernity. Earth has always been the most widely used material for building in India and is apart of its culture. Traditionally, mud construction varies enormously with topography, climatic condition and needs of different regions. The common methods used for earth construction are cob, wattle and daub, rammed earth, and adobe. Approximately 55% of homes in India still use raw earth for walls. Earth is now though of as a poor man's material because of disadvantages such as high maintenance and low durability.

II. STABILIZED MUD BLOCK

Mud (soil) is the most widely distributed resource for building construction; it is useful to explore ways of „stabilizing mud‟ without employing an energy intensive technique like brick burning. „stabilized mud‟ may now be defined as, mud which does not soften due to the action water, by the use of a small quantity of a binding agent. Cement, lime, cement and lime, lime and pozzolana, organic binders are some of the typical „stabilizers‟ which can be used to produce a „stabilized mud block‟. The performance of a soil based building block depends to a considerable extent on its density. Low density blocks are rather porous and will not have good strength. It is hence necessary to densify a soil while making a stabilized block, besides adding stabilizers. ForThis purpose, the soil has to be subjected to adequate pressure at suitable moisture content.This process is known as „compaction‟. The compaction can be done inside a machine mould to produce a standard sized „mud block‟.Alternatively, the soil can be directly compacted in a wall using a movable mould in what is known as „rammed earth‟ construction. As a rule, it is desirable to produce a „stabilized mud‟ with a dry density of 1.80 – 1.85 gm/cc.Thus, the process of stabilized mud block (SMB) making has two steps: firstly, the right type of soil has to be mixed with a specified amount of stabilizer and secondly, it has to be „compacted‟ into a high density block at suitable moisture.

III.SPECIFIC OBJECTIVES

To achieve the main objectives of this project work, we have drawn some of the specific objectives.

1. To reduce the cost of housing using stabilized mud blocks.
2. To find compressive strength of bricks by varying the percentage of cement.
3. To find the percentage absorption of water by varying the percentage of cement in bricks.

IV. MARDINI PRESS MACHINERY

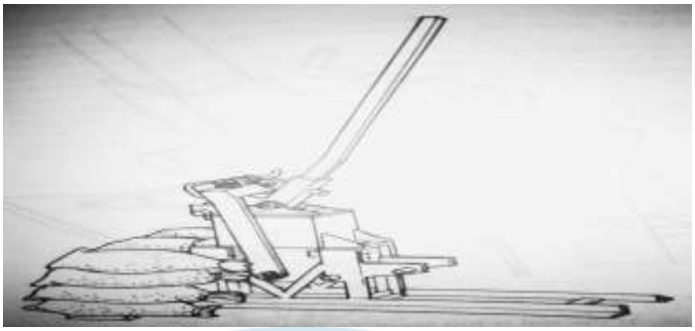

Fig 1.1 Mardini press machine

A. Specification of Mardini Press

Size of machine: 1300 x 500 x 500 mm
Weight of Machine: 140kgs.
Size of Block: 230x190x110mm
No. of Blocks per cycle: 1 No
Energy Transmission: Lever with cam and toggle mechanism develops 12 tons of force during compaction.
Type: Portable
Manpower: Skilled - 1, Unskilled - 5
Energy Source: Manual
Compaction by: Pressure
Compressive Strength: 30-40 kg/cm^2
Production capacity: 500-600 blocks (per day in 8 hours shift)
Stabilization of soil by: 5-8% cement
Figure shows the details of the MARDINI. Three sizes of stabilized mud blocks can be made in the machine:

- 305 x143 x 100 mm
- 230 x 190 x 110 mm
- 230 x 108 x 100 mm

The first block is useful when a wall thickness of 305 mm or 143 mm is desired. The second block is the most commonly used and leads to a wall thickness of 230 mm or 190 mm. The third block is actually a half - block for the second one to be used at wall corner, Doors/window jambs, wall intersections, etc. The machine with a single mould weighs around 135kg and can be easily transported.Specialized mud blocks for special applications: It is sometimes useful to produce blocks of different shapes and sizes to meet the functional and decorative needs of buildings. The following figures shows blocks with corner rounding, blocks for corbels, filler blocks for roofing and cornice blocks.

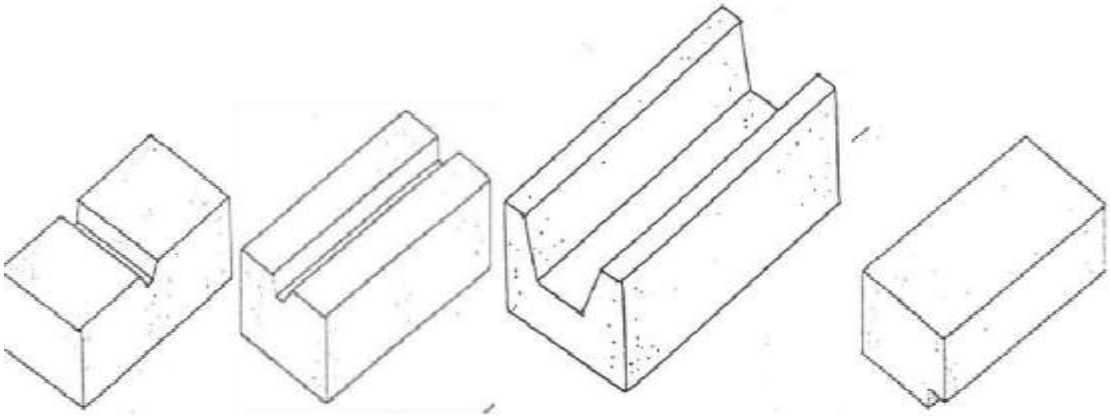

Fig 1.2Specialized mud blocks

V. METHODOLOGY ADOPTED

The process of manufacture of stabilized mud blocks involves the following five steps

- Soil preparation.
- Mixing stabilizer & moisture.
- Block pressing.
- Stacking of blocks
- Curing of blocks

Any planning of mud construction must be preceded by a selection of the location where the soil has to be obtained. It is often argued that the top 15 to 20cms layer of soil must be rejected due to presence of organic matter. From studies & experience, however, most of the soils in dry land contain very little organic matter to be of concern in soil block production. Sometimes, there is a tendency to create a pit & continuously obtain soil from the pit. This may be right if the pit is to be used for a basement construction or as a water tank. If the soil so obtained does not have the right constituents, it may be modified by the addition of other soils or sand as the case may be. In general, the soil will have to be sieved through a 5mm sieve to remove roots & clay lumps. If there are too many clay lumps, the soil may be spread in a thick layer (about 15cm thick) on a level ground & about 15% moisture sprinkled on the lumpy soil. The soil may be left in that condition for a day & then the lumps may be bro ken on softening of the soil

Mix the soil & cement thoroughly till the presence of neat cement cannot be detected visually. This mixing is done preferably when the soil is dry. It can be carried out alternatively in a concrete mixer. Pour the cement pile of soil mix the soil and the cement. The soil-cement mixture is mixed with water. The proportion of water is approximately close to the field optimum moisture content. Water to be mixed with this will be about 10% (it is here by assumed that the dry soil will already have nearly 5% moisture). The 10% of water should be now added gradually to the soil through a garden rose can. The soil cement mixture & moisture must be thoroughly mixed with water by hand even as the water is being added. After all the water is added test if the water content is optimum. This can be easily determined by making a ball of the moist soil in the palm of your hand. The soil should not stick to the hand in the process. If the moisture is inadequate, try adding 2 or 3litres of water more to get the right consistency. If the water is too much, add some dry soil & cement. The water dosage may then be reduced for the next batch.

The soil has to be prepared in batches for block pressing. When cement is used as one of the stabilizers, the quantum of moist soil prepared at a time must be less than or equal to about 25 scoops. Larger batch size results in the last few blocks being pressed after the initial setting of cement. This can lead to poor strength gain. In case a larger volume of soil is to be taken for dry mixing, water is added to only half the volume of soil at a time.The soil block machine must be prepared every morning by cleaning all the soiled parts and by tightening the mould box bolts.

The following steps are to be followed in a sequence for pressing mud block in mardini machine.

- Anchoring the machine: the machine should be anchored in position using sandbags or foundation concrete. The toggle lever is locked such that it becomes a simple lever. It is moved to one side &the lid is opened. The bottom plate inside the mould.
- Weighing the soil: the mixture of soil, stabilizer & moisture is taken in a scoop & weighed. Pour the mixture now into the mould through quick up & down motion of the scoop.
- Compaction: the lid of the machine is now closed & the toggle lever is now slated on the lid after unlocking the lock. The lever is pulled down till the compaction stroke is completed
- Ejecting the block: the lever is brought back into near vertical& locked into a simple lever. It is moved down slightly to open the lid. The simple lever is now pressed further down to eject the mud block.
- The block is removed along with the thin base plate and taken for stacking, the machine is now ready for the next block

The blocks have to be stacked on a level ground preferably in a shaded area. The blocks may be stacked one above the other up to six layers.The blocks were cured for 28 days by gentle sprinkling water, and by using a garden rose can. The top of the blocks were covered with gunny cloth to prevent water evaporation.

(1)

(2)

(3)

(4)

(5)

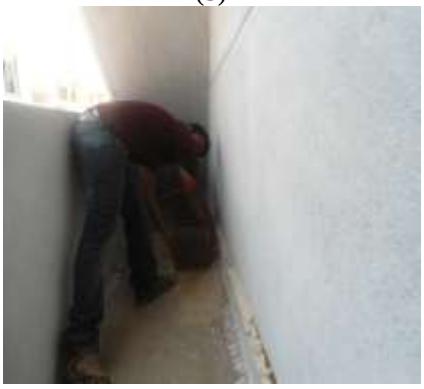

(6)

Fig 1.3 preparation of Mud block

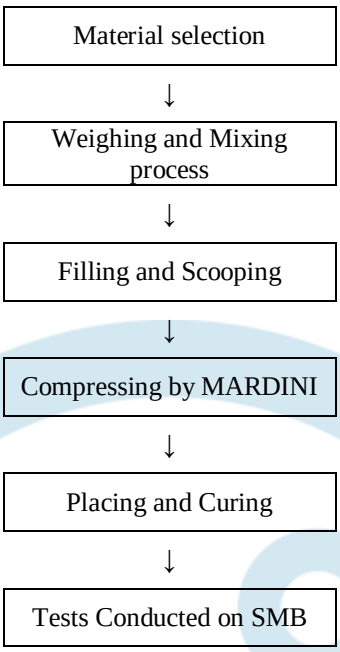

Flow chart for preparation of Stabilized Mud Block

VI. RESULTS AND DESCISSION

A. CASE 1 : CEMENT AND FLY ASH

1)Compressive strength

Table1.1 Wet compressive strength of SMB with replacement of fly ash in cement

Sl. no.	Proportions	Area in mm^2 (A)	Avg. compressive strength in N/mm^2		
			7 days	14 days	28 days
1	4% cement + 4% fly ash	230*190	1.42	1.90	2.54
2	5% cement + 3% Fly ash		1.69	2.16	2.97
3	6% cement + 2% Fly ash		2.0	2.37	3.21
4	7% cement + 1% fly ash		2.43	2.88	3.52

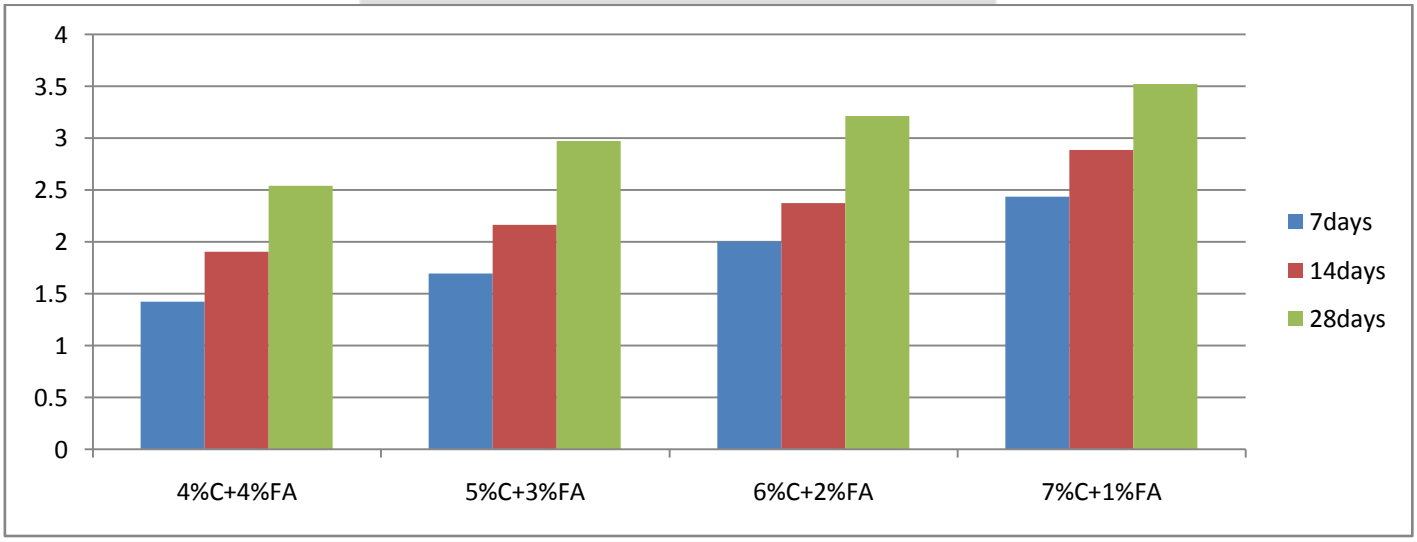

Fig 1.4 compressive strength for various proportions at 7, 14 & 28 days

B. CASE 2 : CEMENT , FLY ASH , SOIL AND QUARRY DUST

1) Compressive strength

Table 1.2 Wet compressive strength of SMB (cement , Fly ash, soil &quarry dust)

Sl. no.	Proportions	Area in mm^2 (A)	Avg. compressive strength in N/mm^2		
			7 days	14 days	28 days
1	5% cement + 5% fly ash+ 50% soil + 40% Quarry Dust	230*190	2.11	2.59	2.98
2	5% cement + 10% fly ash+ 50% soil + 35% Quarry Dust		2.41	2.88	3.18
3	5% cement + 15% fly ash+ 50% soil + 30% Quarry Dust		2.94	3.19	3.46
4	5% cement + 20% fly ash+ 50% soil + 25% Quarry Dust		3.43	3.88	4.34

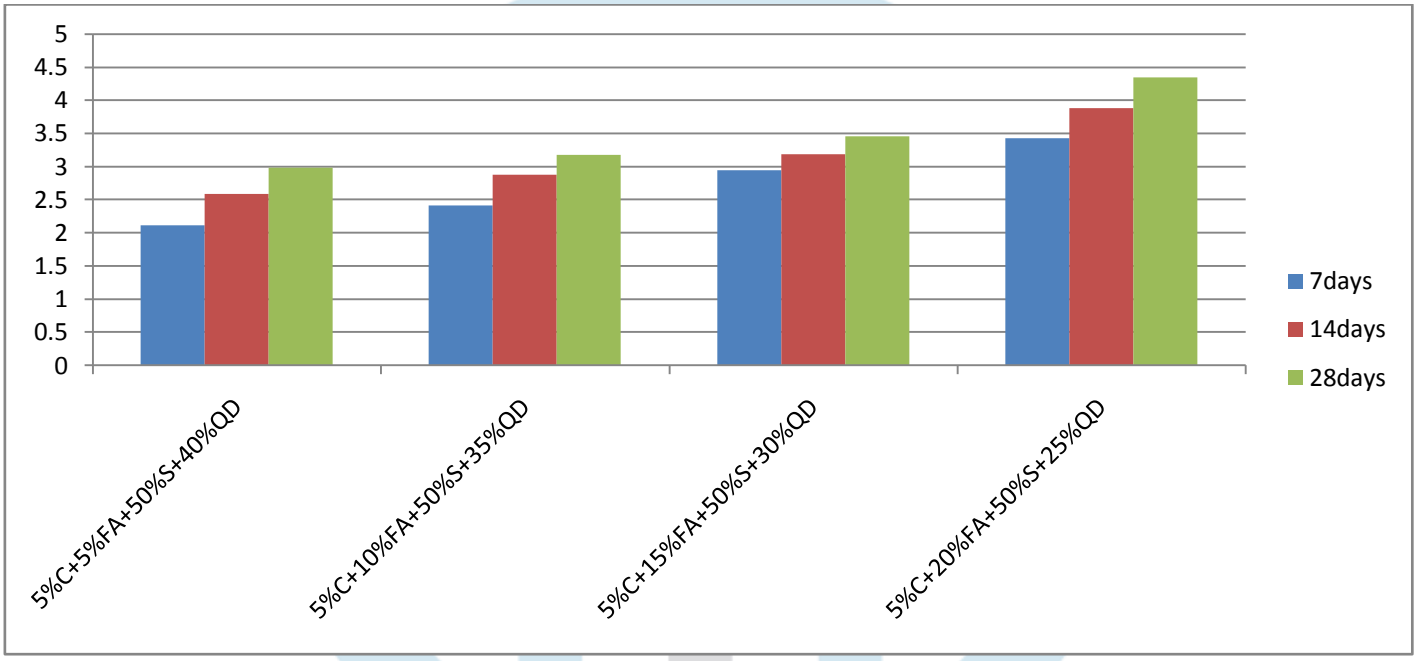

Fig 1.5 Wet compressive strength for various proportions at 7, 14 & 28 days

VII CONCLUSIONS

Based on detailed Project work carried out, we have drawn some of the conclusions

1. From table 1.1, it is clear that the compressive strength is 3.52 N/mm^2 for 8% cement replacedby 1% fly ash, which is greater than the standard value prescribed for bricks (3.2 N/mm^2).
2. Hence bricks with 7% cement and 1% fly ash is proved to be economic and can be used for twoStoried buildings.
3. From table 1.2, the compressive strength is 4.34 N/mm^2 which is greater than the standard value.Hence bricks with 5% cement, 20% fly ash and 25% quarry dust can be used.
4. The SMB made using fly ash is cost effective. Since the use of fly ash reduces water absorption,Plastering process can be avoided on interior of buildings.

REFERENCES

[1]. Kabiraj.K, Mandal.U.K, Experimental investigation and feasibility study on stabilized compacted earth block using local resources, International Journal Of Civil And Structural Engineering Volume 2, No 3, 2012

[2]. YaserKhaledAbdulrahman, Al-Sakkaf, Durability properties of stabilized earth blocks. Indian Standard1725-1982, (First Revision), Specification for Soil Based Blocks used in General Building Construction, Bureau of Indian Standards, New Delhi.

[3].B.V. Venkatarama Reddy, K.S Gagdish, Embodied energy of common and alternative building materials and technologies,Energy and Buildings 35 (2003) 129–137

[4]. SatpremMaïni, Compressed stabilized earth block sand stabilized earth techniques, Research and development by the Auroville earth institute (AVEI).

[5]. HabtemariamMolla, Study of stabilized mud block as an alternative building material and development of models, A thesis submitted to Mechanical Engineering Department School of Graduate Studies of Addis Ababa University.

[6]. Bansal Deepak, Masonry from stabilized earth Blocks-Sustainable & structurally viable Option, International Journal of Earth Sciences and Engineering pp. 772-779.

[7]. HanifiBinici, OrhanAksogan, Tahir Shah, Investigation of fibre reinforced mud brick as a building material, Construction and Building Materials 19 (2005) 313–318.

[8]. S.Krishnaiah, P.Suryanarayana Reddy, Effect of Clay on Soil Cement Blocks,The 12th International Conference of

[9]. International Association for Computer Methods and Advances in Geomechanics (IACMAG).
[10]. Doug Harper, Alternative Methods of Stabilisation for Unfired Mud Bricks, School of Civil Engineering & Geosciences, Newcastle University.
[11]. Dr. L. Dinachandra Singh, Shri Ch. Sarat Singh, Final Report On Low Cost Housing Using Stabilised Mud Blocks, Manipur Science & Technology Council.