A STUDY ON NETWORK LIFETIME TECHNIQUES

[1]Nasreen. M, [2]Dr. B. Muthusenthil

[1]Student, [2]Assisstant Professor (Sr.G)
Valliammai Engineering College – Kattankulathur

***ABSTRACT*: Wireless communication gets its application in various fields, in particular this project focuses on vehicle monitoring with theft avoidance in the unmanned region through wireless sensor network and also improving lifetime of sensor network to achieve maximized sensing operation of sensor node by using clustering algorithm Previously, traffic monitoring has been achieved through IOT in the manned regions. And network lifetimes of Wireless Sensor Networks with static nodes are improved, whereas WSN with dynamic sensor node architecture remains unsolved. In a wireless network, if the sensors are redistributed consistently across the network, energy depletion rates will be different for their different traffic intensities depending on their locations. For achieving maximum network lifetime deployment strategies proposes three inventions, first deploy the sensors in network and then propose energy consumption model for maximizing NLT in WSN. Hence, this model proposes vehicle monitoring where manned monitoring is not performed.**

***Keywords*- IoT, WSN, NLT**

I .INTRODUCTION

OVERVIEW

Wireless communication is among technology's biggest contributions to mankind. Wireless communication involves the communication of datas over a distance without help of wires, cables or any other forms of electrical conductors. The transmitted distance can be anywhere between a few meters (for example, a television's remote control) and thousands of kilometres (for example, radio communication).

An Embedded system is a unique purpose computer manageded electro-mechanical system in which the computer is completely combined by the device it controls. An embedded system has specific requirements and performs pre-defined tasks, unlike a general-purpose personal computer. An embedded system is a computer- controlled system.

The core of any embedded system is a microprocessor, programmed to perform a few tasks (often just one task). This is to be compared to other computer systems with general purpose hardware and externally loaded software loaded software. Embedded systems are often designed for mass production.

An Embedded system is a exceptional purpose computer hold electro-mechanical system in which the computer is completely combined by the device it controls. An embedded system has distinct requirements and implements pre-defined mission, unlike a general-purpose personal computer. An embedded system is a computer- hold system.The core of any embedded system is a microprocessor, programmed to perform a few duties (often just one task). This is to be analyse to other computer systems with general purpose hardware and externally laden software. Embedded systems are often designed for mass production.

Embedded systems are computer systems in the extensive sense. They include all computers.

Most commercial embedded systems are designed to do some duty at a low cost. Most, but not all have real- time system drawbacks that must be met. They may need to be very fast for some functions, but most other functions will probably not need speed. These systems meet their real- time drawbacks with a combination of special purpose hardware and software tailored to the system requirements.

It is difficult to differentiate embedded systems by speed or cost, but for high volume systems, cost usually influence the system design. Often many parts of an embedded system need low performance compared to the primary goal of the system. This allows an embedded system to be purposely to lower costs compared to a general- purpose computer accomplishing the same task, by using a CPU that is just "good enough" for these secondary functions.

Embedded systems reside in machines that are expected to run frequently for years without errors. Therefore the software is usually developed and tested more carefully than software for Personal computers. Many embedded systems automatic working parts such as Disk drives, switches or buttons because these are not reliable compared to solid- state parts such as Flash memory.

In addition, the embedded system must be able to restart itself even if catastrophic data misuse has taken place. This is usually accomplished with a standard electronic part called a watchdog timer that resets the computer unless the software sometime resets the timer.

II RELATED WORK

[1]Hasan Omar Al-Sakran Proposed, A novel intelligent traffic administration system, based on Internet of Things, which is featured by low cost, high scalability, high compatibility, easy to upgrade, to replace traditional traffic management system and the proposed system can improve road traffic tremendously. The paper implements an architecture that combines internet of things with agent technology into a single platform where the agent technology handles effective communication and interfaces among a large number of heterogeneous highly distributed, and decentralized devices within the IoT.

[2]Surbhi Chhabra, Himanshu Jain, Sandeep Saini proposed an Automatic Vehicle License Plate Detection System (AVLPDS) is the extraction of vehic1e license plate information from an image. Besides the safety aspects this system is used in many applications, viz. electronic payment systems, freeway, arterial monitoring systems for traffic surveillance etc. The purpose of this paper is to present the FPGA algorithmic model of most efficient algorithm among three algorithms: Edge-based, Connected-Component based and Histogram based. Each approach is analyzed on the basis of precision and recall rates to determine the success of each approach. After comparison, we can say Histogram based approach has an advantage of being simple and thus faster. Therefore, in this paper, we have used Histogram based Edge Processing approach to detect the license plate and presented the FPGA implementation of AVLPDS for the same.

[3]Priyanka, 1V. Sharmila , 1V.C. Sindhu, 2P. Sangeetha proposed the effective use of wireless technology and high speed micro controller to provide smooth and clear flow of traffic for emergency vehicle to reach the destination on time. This is implemented by using ARDUINO, RFID reader for identifying the RFID tag placed in the critical vehicle. The information on identifying the emergency vehicle is sent to the traffic system through RF transmitter and receiver system, for automatically controlling the traffic light until the emergency vehicle passes through. Pair of IR sensors is used to estimate the congestion near the traffic and this information is provided to the ambulance driver using GSM. In addition to this scheme, the system also finds the stolen vehicle enters through that path. On detecting the stolen vehicle the information is sent to the control room through GSM for immediate action. This system is completely automated and wireless which avoids human intervention.

III SYSTEM ANALYSIS

PROBLEM DEFINITION

Traffic monitoring by monitoring number of vehicle on one road, tracking vehicle's violation, sending warning massages, guide drivers to avoid possible crowded sections based on the prediction of the traffic network, real-time traffic navigation. the extraction of vehicle license plate information from an image, Vehicle accident prevention by method of alcohol detector in an effort to reduce traffic accident cases based on driving under the influence alcohol, ARDUINO, RFID reader for detecting the RFID tag placed in the emergency vehicle. In case of over speeding in a speed limit zone area we are going to limit a speed to a certain cutoff value. The IR transmitter is used to communicate the infrared rays in our eye. A piezo electric sensor is placed on tyre which detects the pressure of tyre when it reduced below threshold then it plays a buzzer. Maximization of network lifetime in wireless sensor network has been attempted in past years of research with static sensor nodes. Improved NLT is achieved by optimizing packet size and transmission power level.

IV SYSTEM DESIGN AND IMPLEMENTATION

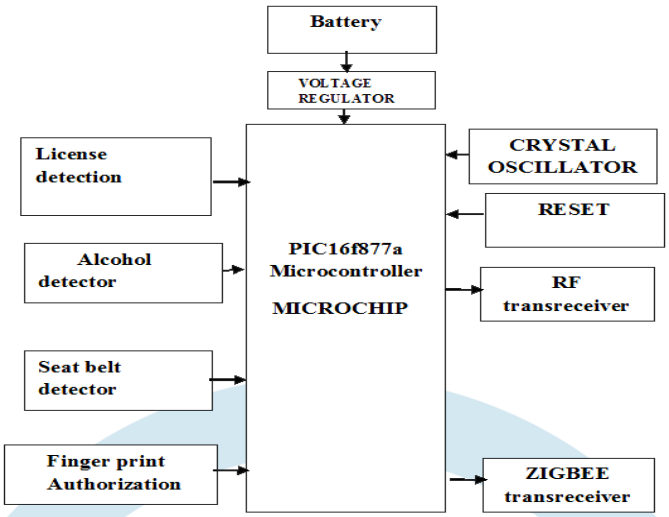

Fig 1. System Design

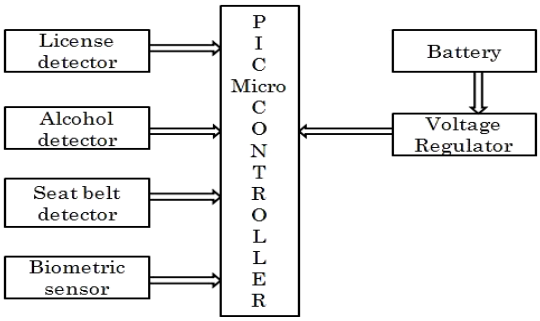

Fig 2. Device Design

INTEGRATION OF SENSOR

System model includes identification of sensor connected to the system and integrating them according to their sensing process.Various sensors/detectors like gas sensor, infrared sensor, RFID, biometric sensor are integrated to perform various sensing operations

INTERFACING WITH MICROCONTROLLER

Interfacing of microcontroller performs interfacing all the sensor data identified with the microcontroller in the system.This is achieved using embedded c programming.

WIRELESS COMMUNICATION

Defining network lifetime for all the sensor nodes entering the range. Estimating and formulating the lifetime for sensor node in range with base station.Performing transmission and reception of the data collected by the microcontroller in the device to the base station in the vicinity of the vehicle/device.

V CONCLUSION

The proposed vehicle monitoring system provides more than one level of security and prevention of any mishaps that shall occur due to the negligence of the driver. It also helps in preventing theft of vehicle by performing authentication through the RFID and biometric sensors in the vehicle monitoring system. With the integration of sensors it is possible to perform vehicle monitoring and helps in vehicle theft identification in any unmanned regions. Alcohol detection helps in preventing mishaps that could possibly occur due to drunk and drive situation. Theft identification/ avoidance is achieved through driving license and biometric

Authentication. Seatbelt detector helps to indicate driver about the seat belt status. The maximization of sensor helps in prolonged sensing capability of the sensors integrated in the system.

REFERENCE

[1] Hasan Omar Al-Sakran, " Intelligent Traffic Information System Based on Integration of Internet of Things and Agent", (IJACSA) International Journal of Advanced Computer Science and Applications, Vol. 6, No. 2, 2015

[2] Surbhi Chhabra, Himanshu Jain, Sandeep Saini ,"FPGA based hardware implementation of automatic vehicle license plate detection system", 2016 Intl. Conference on Advances in Computing, Communications and Informatics (ICACCI), Sept. 21-24, 2016,

[3] Vaishnavi.M , Umadevi.V , Vinothini.M , Bhaskar Rao .Y , Pavithra.S, "Intelligent alcohol detection system for car", International Journal of Scientific & Engineering Research, Volume 5, Issue 11, November-2014, ISSN 2229-5518

[4] Priyanka, 1V. Sharmila , 1V.C. Sindhu, 2P. Sangeetha, "Implementation intelligent traffic control, ambulance clearance and stolen vehicle detection", International Journal of Research and Engineering, Vol 3 issue 3, 2015.

[5] Prof. R.M. Sahu, Vivek Patil, Gourav Homkar, Sachin Palve, "Intelligent Security System for Smart Vehicle", International Journal Of Innovative Research In Electrical, Electronics, Instrumentation And Control Engineering Vol. 4, Issue 3, March 2016.

[6] R. Ramani, S. Valarmathy, Dr. N. Suthanthira Vanitha, S. Selvaraju, M. Thirupathi, R. Thangam, "Vehicle tracking and locking system based on GSM and GPS" I. J. Intelligent Systems and Applications, 2013, 09, 86 -93.

[7] Reem Aldaihani and Hosam AboElFotoh, "A new scheme for maximizing the lifetime of heterogeneous Wireless Sensor Networks" International Conference on Computing Science and Engineering (ICCSE2015), 15-17 March 2015,

[8] Joel Helkey∗, Lawrence Holder, Behrooz Shirazi," Comparison of simulators for assessing the ability to sustain Wireless Sensor Networks using dynamic network reconfiguration" , Sustainable Computing: Informatics and Systems 9 (2016) 1–7.

[9] Ayhan Akbas, Huseyin Ugur Yildiz, Bulent Tavli, and Suleyman Uludag, "joint optimization of transmission power level and packet size for WSN lifetime maximization" IEEE SENSORS JOURNAL, VOL. 16, NO. 12, JUNE 15, 2016

[10] Fei Ding and Aiguo Song, "Development and coverage evaluation of zigbee-based wireless network applications" Hindawi Publishing Corporation Journal of Sensors Volume 2016, Article ID 2943974.