AUTONOMOUS ELEVATED TRAVELLING SYSTEM STRADDLING BUS

[1]Vishal Sunil Pansare, [2]Vinod Mahadev Kenjale, [3]Mahesh Mohan Salunke, [4]Prof. Kiran Ganpat Jagtap

[1,2,3]Research Scholar, [4]Assistant Professor
Department of E&TC
Shiv Nagar Vidya Prasarak Mandals College of Engineering
Malegaon (BK), Baramati, Pune

***Abstract*— The main aim of this paper is to illustrate the technology used in straddling bus movements which are used in most of the developed countries. This train is equipped with a controller that enables the automatic stopping of the train from station to station. This paper presents the development process of a prototype for a driverless straddling bus implemented using a ARM microcontroller. Simulation for the system's circuits is done with the aid of Proteus software. The hardware circuits, which are built on printed circuit boards (PCB), are interfaced with actuators and sensors for automation purposes. The hardware is assembled in a toy-like prototype straddling bus which follows the line. The C programming language is used for programming the microcontroller.**

***Keywords*—Elevated Platform Bus, Microcontroller, DC Motor, RFID Reader, RFID Tag, LCD, IR sensor, Ultrasonic sensor, Buzzer, DC motor driver.**

II. PROBLEM DEFINATION

In the current transportation system , the main problem faced by the people is 'traffic' and the overloading of public transport.Also the lots of accident occur due to human errors.

High building cost and large settling time is required in current transportation systems. So we have decided to design a system which will play the main role to overcome all these problems.

Our proposed system has an elevated platform to avoid problem of traffic jam. It has high public carrying capacity than regular buses , monorail. It does not required special tracks like BRT , mono , metro. Also doesn't require large construction and can be implemented within short time.

I. INTRODUCTION

As city population grows, an innovative means of public transportation with high efficiency and large capacity is on call. Our project is inspired by a Chinese innovation named as Straddling Bus. The main feature is the structure of this new conveyor. The lower part is like a tunnel to let lower cars freely pass through, while people stand at the upper deck. Besides the novel structure, our project also features in its autonomous navigation system. Also, as far as the public transportation is concerned, safety precaution measures are indispensable.

III. BLOCK DIAGRAM

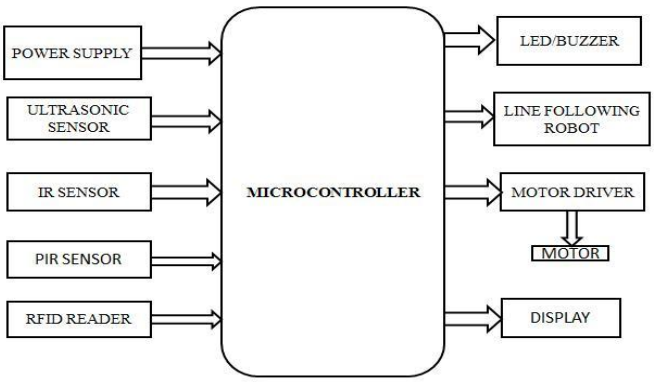

Fig. 1 Block diagram of Autonomous elevated travelling system

IV. WORKING

This proposed system is an autonomous straddling bus and it eliminates the need of any driver. Thus, any human error is ruled out. In this project microcontroller from ARM family has been used as CPU. Whenever the train arrives at the station it stops automatically, as sensed by an IR sensor. Then the conveyer starts automatically so that the passengers can go inside and outside the bus. The movement of the bus is controlled by a motor driver IC interfaced to the microcontroller. The train incorporates a buzzer to alert the passengers before staring. As the bus reaches the destination the process repeats thus achieving the desired operation.

Further the project can be enhanced by making this system more advanced by displaying the status of the bus over an LCD screen for the convenience of the passengers. The status of the train consists of the parameters like current station , next station , number of passengers onboard etc. In this RFID based automatic fare collecting system using RF ID card Ticketing explained that a system that uses the station based location information. Card is sensed twice while entering the bus and while leaving the bus. The deduction of travelling fare is based on the number of stations covered between two punching. Using the station count we can find the distance travelled and amount. The amount can be deducted from the card. A microcontroller can be used to program this system by interfacing RFID card. By implementing this system the usage of loose cash can be reduced and efficient ticketing can be implemented.

V. FLOWCHART

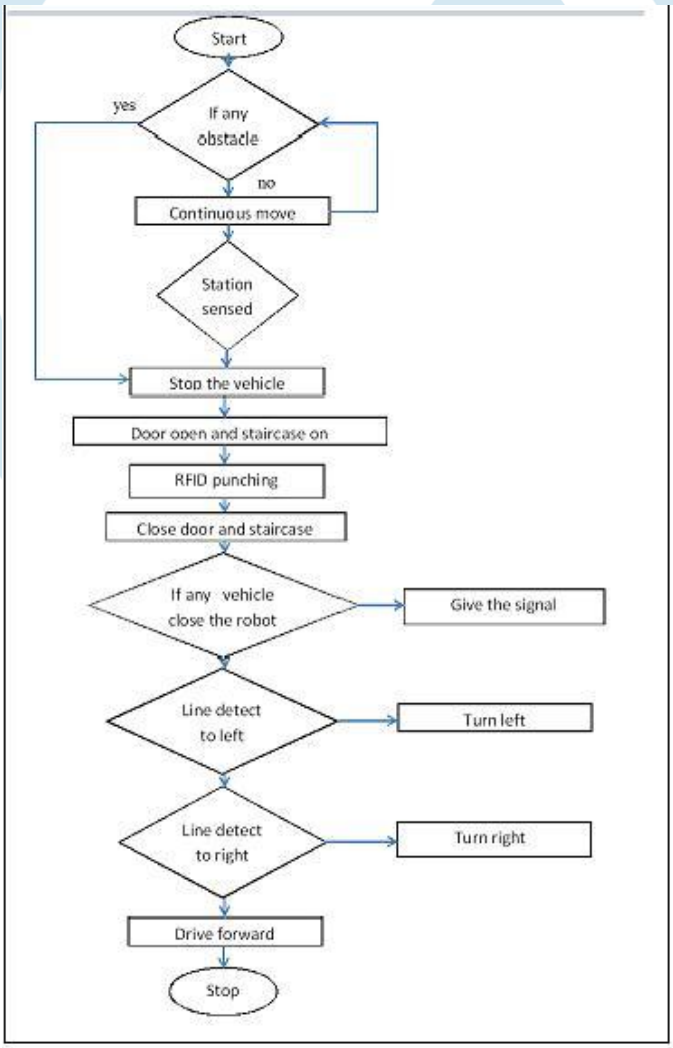

VI. CONCLUSION

This system is mainly to support the public transformation system. It highly reduces the modern day problem of traffic jams that we are facing today. It will carry the large number of peoples which will lessen the load on public transport, more energy efficient and optimize passenger service automatically in real time. In terms of operational efficiency and cost-saving, driverless networks avoiding human error Due to its low cost and low settling time it can be implemented in short duration.

REFERENCES

[1] Guruprasad Patil [1], Dr.C.R Rajashekhar [2] - RFID Based Metro Train System , International Journal of Advancements in Research & Technology, Volume 3, Issue 5, May-2014 ISSN 2278-7763

[2] Akshatha R. , Dr. J Meenakumari -Enhanced &Integrated E-Ticketing - An One Stop Solution, International Journal of Advance Research in Computer Science and Management Studies, Volume 3, Issue 6, June 2015

[3] Prakash Ratan , Chandra Jogi - Auto Metro Train to Shuttle Between Stations - International Journal & Magazine of Engineering, Technology, Management and Research , Volume No: 2 (2015), Issue No: 5 (May)

[4] R.Valarmathi, G.Karthika -Smart Ticketing System in Metro Rail -International Journal of Advanced Research in Electrical, Electronics and Instrumentation Engineering , Vol. 3, Special Issue 3, April 2014

[5] Thabit Sultan Mohammed1, W isam Fahm i A l - Azzo 2 , Mohammed Ahmed Akaak3, Mohammed Laheeb Suroor4 Full Automation in Driverless Trains: A Microcontroller-Based Prototype - International Journal of Advanced Research in Electrical, Electronics and Instrumentation Engineering Vol. 3, Issue 7, July 2014

[6] V.Sridhar 1-Automated System Design For Metro Train -International Journal of Computer Science Engineering (IJCSE) ,Vol. 1 No.01 September 2012